SECTION BR

CONTENTS

PRECAUTIONS AND PREPARATION 2
Precautions 2
Commercial Service Tools 2
BRAKE HYDRAULIC LINE/CONTROL VALVE 3
Brake Hydraulic Line 3
Proportioning Valve 4
CHECK AND ADJUSTMENT 5
Checking Brake Fluid Level 5
Checking Brake Line 5
Changing Brake Fluid 5
Bleeding Brake System 6
BRAKE PEDAL AND BRACKET 7
Removal and Installation 7
Inspection 7
Adjustment 7
MASTER CYLINDER 8
Removal 8
Disassembly 9
Inspection 9
Assembly 9
Installation 10
BRAKE BOOSTER/VACUUM HOSE 11
Brake Booster 11
Vacuum Hose 12
FRONT DISC BRAKE 13
Pad Replacement 13
Removal 15
Disassembly 15
Inspection — Caliper 15
Inspection — Rotor 16
Assembly 16
Installation 16
REAR DISC BRAKE 17
Pad Replacement 17
Removal 19
Disassembly 19
Inspection — Caliper 20
Inspection — Rotor 21
Assembly 21
Installation 23
PARKING BRAKE CONTROL 24
Removal and Installation 24
Inspection 25
Adjustment 25
ANTI-LOCK BRAKE SYSTEM 26
Purpose 26
Operation 26
ABS Hydraulic Circuit 26
System Components 27
System Description 27
Removal and Installation 29
TROUBLE DIAGNOSES 32
How to Perform Trouble Diagnoses for Quick and Accurate Repair 32
Preliminary Check 33
Component Parts and Harness Connector Location 34
Circuit Diagram for Quick Pinpoint Check 35
Wiring Diagram — ABS — 36
Self-diagnosis 41
CONSULT 44
CONSULT Inspection Procedure 45
Ground Circuit Check 50
TROUBLE DIAGNOSES FOR SELF-DIAGNOSTIC ITEMS 51
Diagnostic Procedure 1 (Wheel sensor or rotor) 51
Diagnostic Procedure 2 (ABS actuator solenoid valve) 53
Diagnostic Procedure 3 (Solenoid valve relay) 54
Diagnostic Procedure 4 (Motor relay or motor) 57
Diagnostic Procedure 5 (Low voltage) 60
Diagnostic Procedure 6 (Control unit) 61
TROUBLE DIAGNOSES FOR SYMPTOMS 62
Diagnostic Procedure 7 (ABS works frequently.) 62
Diagnostic Procedure 8 (Unexpected pedal action) 63

CONTENTS (Cont'd)

Diagnostic Procedure 9
(Long stopping distance) 63
Diagnostic Procedure 10
(ABS does not work.) 64
Diagnostic Procedure 11
(Pedal vibration and noise).....64
Diagnostic Procedure 12 (Warning lamp does not come on when ignition switch is turned on.).....65
Diagnostic Procedure 13 (Warning lamp stays on when ignition switch is turned on.).....67
Electrical Component Inspection 70
SERVICE DATA AND SPECIFICATIONS (SDS) 72
General Specifications.....72
Inspection and Adjustment 72

When you read wiring diagrams:
- **Read GI section, "HOW TO READ WIRING DIAGRAMS".**
- **See EL section, "POWER SUPPLY ROUTING" for power distribution circuit.**

When you perform trouble diagnoses, read GI section, "HOW TO FOLLOW FLOW CHART IN TROUBLE DIAGNOSES" and "HOW TO PERFORM EFFICIENT DIAGNOSIS FOR AN ELECTRICAL INCIDENT".

Precautions

SUPPLEMENTAL RESTRAINT SYSTEM (SRS) "AIR BAG"

The Supplemental Restraint System "Air Bag", used along with a seat belt, helps to reduce the risk or severity of injury to the driver and front passenger in a frontal collision. The Supplemental Restraint System consists of air bag modules (located in the center of the steering wheel and on the instrument panel on the passenger side), a diagnosis sensor unit, warning lamp, wiring harness and spiral cable. Information necessary to service the system safely is included in the **RS section** of this Service Manual.

WARNING:

- **To avoid rendering the SRS inoperative, which could increase the risk of personal injury or death in the event of a collision which would result in air bag inflation, all maintenance must be performed by an authorized NISSAN dealer.**
- **Improper maintenance, including incorrect removal and installation of the SRS, can lead to personal injury caused by unintentional activation of the system.**
- **Do not use electrical test equipment on any circuit related to the SRS unless instructed to in this Service Manual. SRS wiring harnesses are covered with yellow insulation either just before the harness connectors or for the complete harness, for easy identification.**

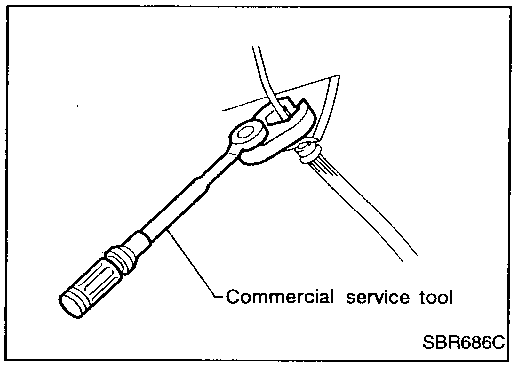

BRAKE SYSTEM

- **Use brake fluid "DOT 3".**
- **Never reuse drained brake fluid.**
- **Be careful not to splash brake fluid on painted areas; it may cause paint damage. If brake fluid is splashed on painted areas, wash it away with water immediately.**
- **To clean master cylinder parts, disc brake caliper parts or wheel cylinder parts, use clean brake fluid.**
- **Never use mineral oils such as gasoline or kerosene. They will ruin rubber parts of hydraulic system.**
- **Use flare nut wrench when removing and installing brake tubes.**
- **Always torque brake lines when installing.**

WARNING:

- **Clean brakes with a vacuum dust collector to minimize risk of health hazard from powder caused by friction.**

Commercial Service Tools

Tool name	Description	
① Flare nut crowfoot ② Torque wrench	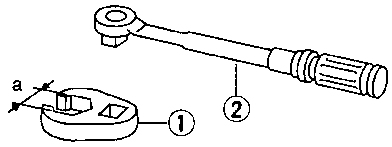 NT360	Removing and installing each brake piping **a: 10 mm (0.39 in)**
Brake fluid pressure gauge	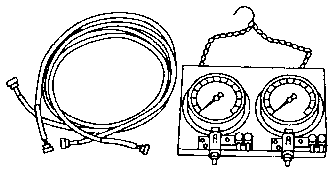 NT151	Measuring brake fluid pressure

Brake Hydraulic Line

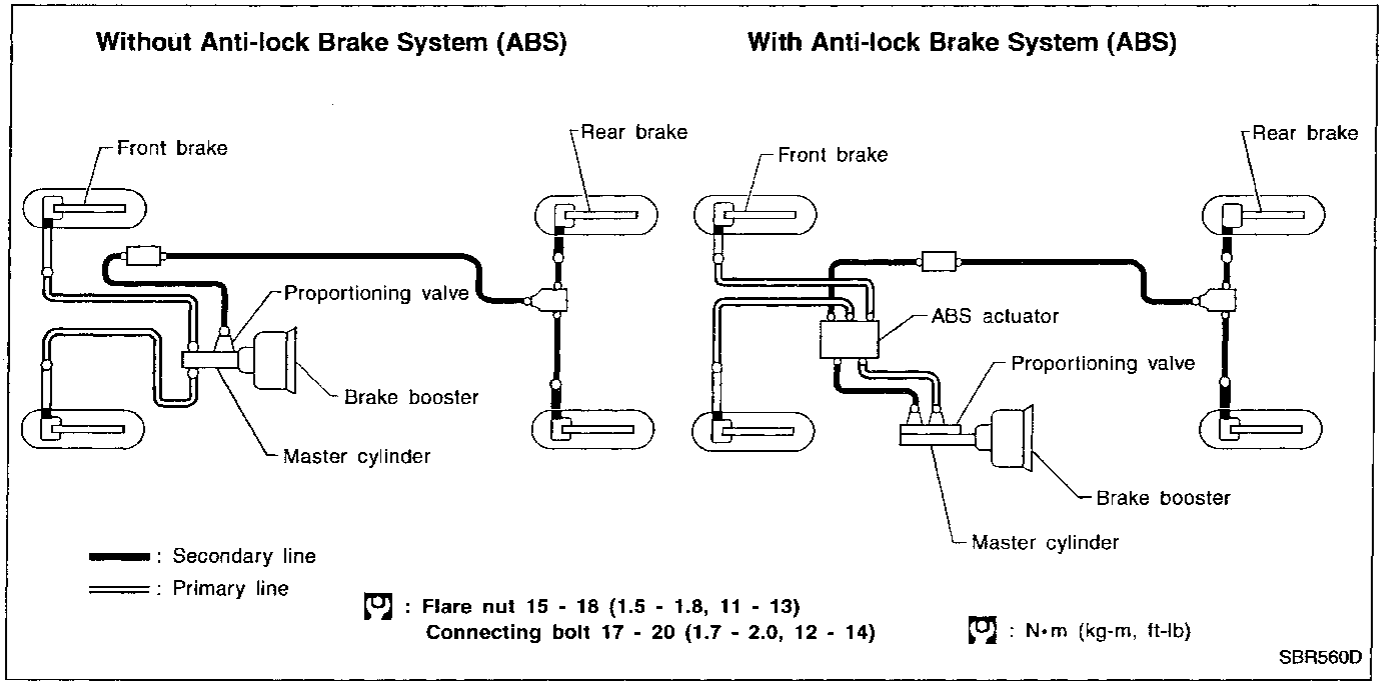

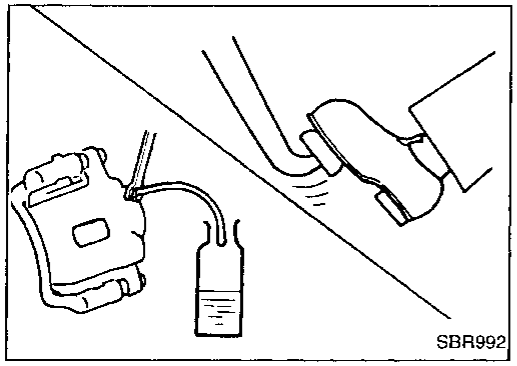

REMOVAL

CAUTION:

- **Be careful not to splash brake fluid on painted areas; it may cause paint damage. If brake fluid is splashed on painted areas, wash it away with water immediately.**
- **All hoses must be free from excessive bending, twisting and pulling.**

1. Connect vinyl tube to air bleeder valve.
2. Drain brake fluid from each air bleeder valve by depressing brake pedal.
3. Remove flare nut connecting brake tube and hose, then withdraw lock spring.
4. Cover openings to prevent entrance of dirt whenever disconnecting brake line.

INSPECTION

Check brake lines (tubes and hoses) for cracks, deterioration or other damage. Replace any damaged parts.

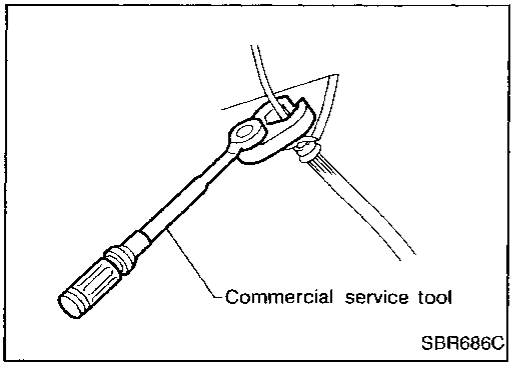

INSTALLATION

CAUTION:

- **Refill with new brake fluid "DOT 3".**
- **Never reuse drained brake fluid.**

1. Tighten all flare nuts and connecting bolts.
   Flare nut:
   : 15 - 18 N·m (1.5 - 1.8 kg-m, 11 - 13 ft-lb)
   Connecting bolt:
   : 17 - 20 N·m (1.7 - 2.0 kg-m, 12 - 14 ft-lb)
2. Refill until new brake fluid comes out of each air bleeder valve.
3. Bleed air. Refer to "Bleeding Brake System", BR-6.

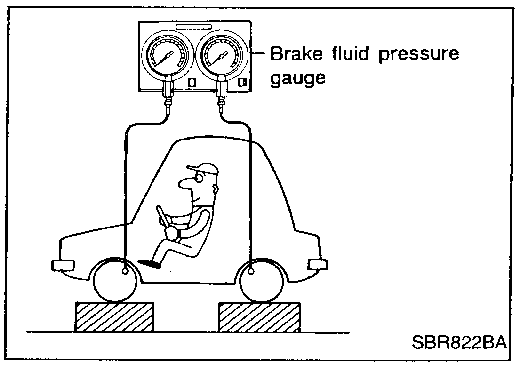

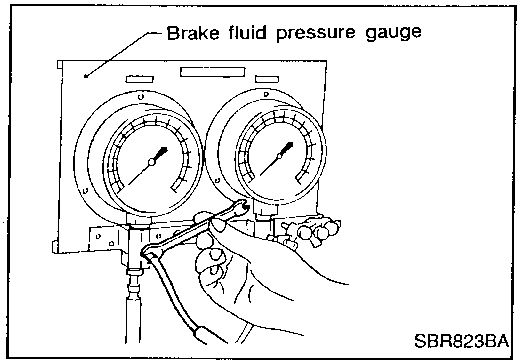

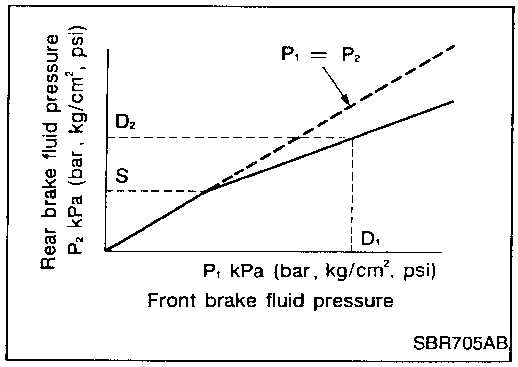

Proportioning Valve

INSPECTION

CAUTION:

- **Carefully monitor brake fluid level at master cylinder.**
- **Use new brake fluid "DOT 3".**
- **Be careful not to splash brake fluid on painted areas; it may cause paint damage. If brake fluid is splashed on paint areas, wash it away with water immediately.**
- **Depress pedal slowly when raising front brake pressure.**
- **Check rear brake pressure 2 seconds after front brake pressure reaches specified value.**
- **For models with ABS, disconnect harness connectors from ABS actuator relay box before checking.**

1. Connect Tool to air bleeders of front and rear brakes on either LH and RH side.
2. Bleed air from the Tool.
3. Check fluid pressure by depressing brake pedal.

Unit: kPa (kg/cm², psi)

Applied pressure (Front brake) D_1	6,375 (65, 924)
Output pressure (Rear brake) D_2	4,119 - 4,511 (42 - 46, 597 - 654)

If output pressure is out of specifications, replace master cylinder assembly (built-in type).

4. Bleed air after disconnecting the Tool. Refer to "Bleeding Brake System", BR-6.

REMOVAL AND INSTALLATION (Built-in type)

Always replace together with master cylinder as an assembly.

- Refer to "MASTER CYLINDER", BR-8.

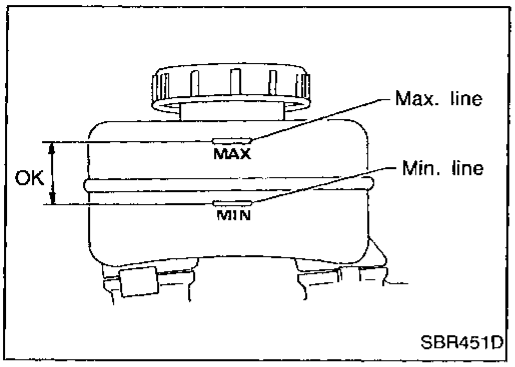

Checking Brake Fluid Level

- Check fluid level in reservoir tank. It should be between Max and Min lines on reservoir tank.
- If fluid level is extremely low, check brake system for leaks.
- If the brake warning lamp comes on, check brake fluid level switch and parking brake switch.

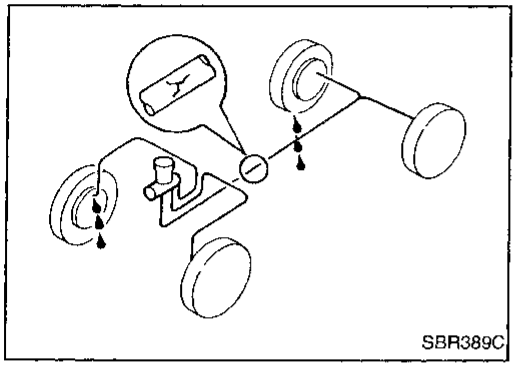

Checking Brake Line

CAUTION:
If leakage occurs around joints, retighten or, if necessary, replace damaged parts.

1. Check brake lines (tubes and hoses) for cracks, deterioration or other damage. Replace any damaged parts.
2. Check for oil leakage by fully depressing brake pedal while engine is running.

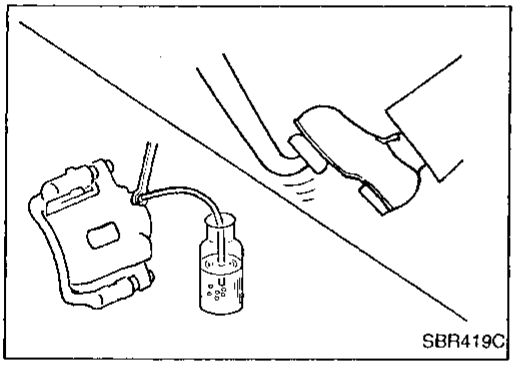

Changing Brake Fluid

CAUTION:

- **Refill with new brake fluid "DOT 3".**
- **Always keep fluid level higher than minimum line on reservoir tank.**
- **Never reuse drained brake fluid.**
- **Be careful not to splash brake fluid on painted areas; it may cause paint damage. If brake fluid is splashed on painted areas, wash it away with water immediately.**

1. Clean inside of reservoir tank, and refill with new brake fluid.
2. Connect a vinyl tube to each air bleeder valve.
3. Drain brake fluid from each air bleeder valve by depressing brake pedal.
4. Refill until brake fluid comes out of each air bleeder valve. Use same procedure as in bleeding hydraulic system to refill brake fluid. Refer to "Bleeding Brake System", BR-6.

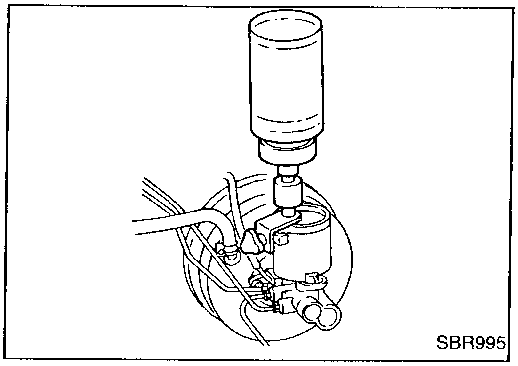

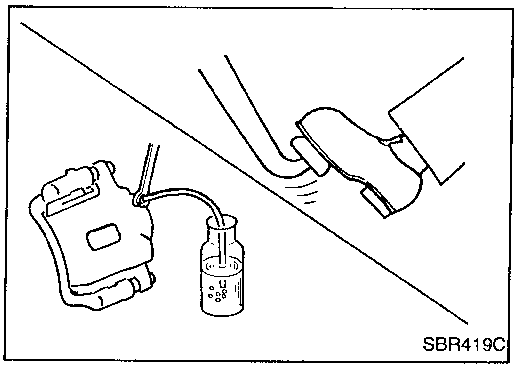

Bleeding Brake System

CAUTION:

- **Carefully monitor brake fluid level at master cylinder during bleeding operation.**
- **If master cylinder is suspected to have air inside, bleed air from master cylinder first. Refer to "Installation", "MASTER CYLINDER", BR-8.**
- **Fill reservoir with new brake fluid "DOT 3". Make sure it is full at all times while bleeding air out of system.**
- **Place a container under master cylinder to avoid spillage of brake fluid.**
- **For models with ABS, turn ignition switch OFF and disconnect ABS actuator connectors or battery ground cable.**
- Bleed air in the following order.
  Right rear brake → Left rear brake →
  Right front brake → Left front brake

1. Connect a transparent vinyl tube to air bleeder valve.
2. Fully depress brake pedal several times.
3. With brake pedal depressed, open air bleeder valve to release air.
4. Close air bleeder valve.
5. Release brake pedal slowly.
6. Repeat steps 2. through 5. until clear brake fluid comes out of air bleeder valve.
7. Tighten air bleeder valve.
   : 7 - 9 N·m (0.7 - 0.9 kg-m, 61 - 78 in-lb)

Removal and Installation

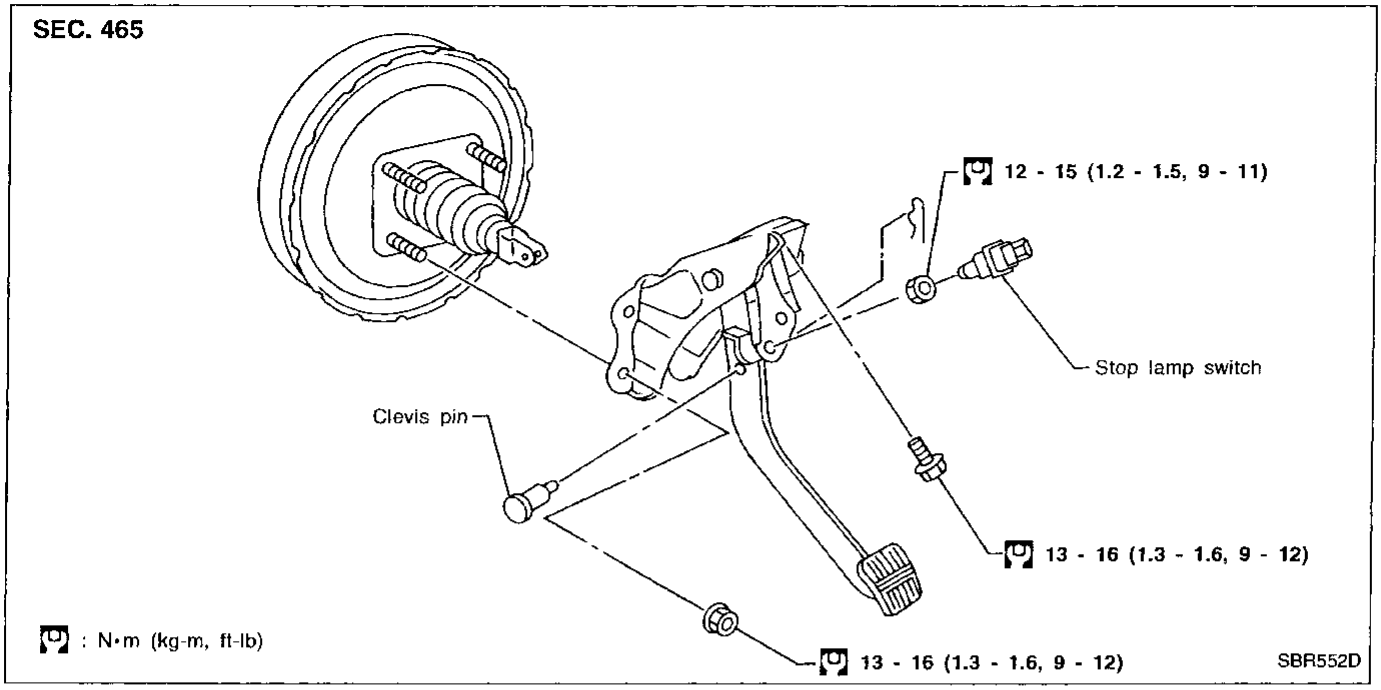

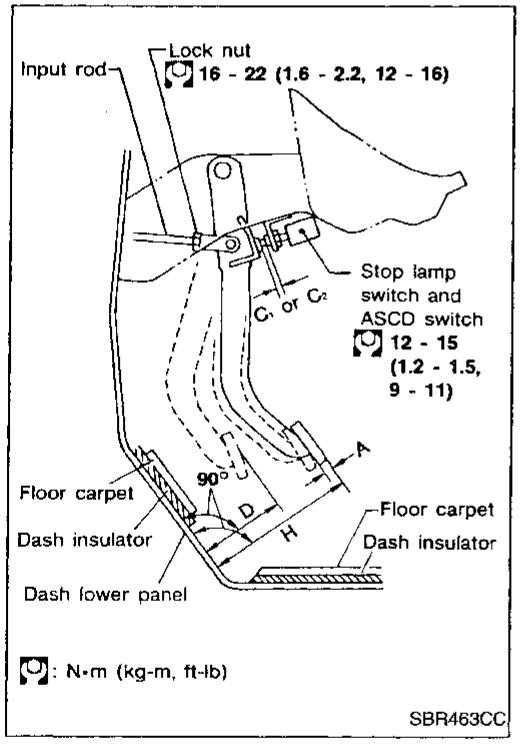

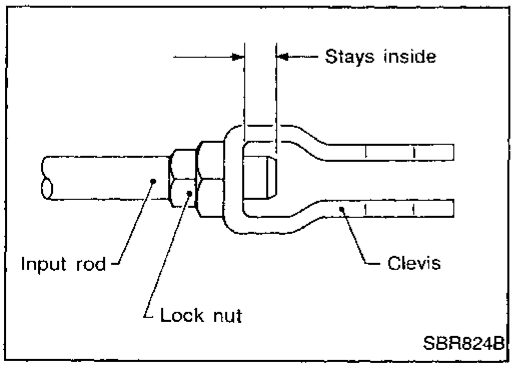

Inspection

Check brake pedal for following items.

- Brake pedal bend
- Clevis pin deformation
- Crack of any welded portion
- Crack or deformation of clevis pin stopper

Adjustment

Check brake pedal free height from dash lower panel. Adjust if necessary.

H: **Free height**
Refer to SDS (BR-72).

D: **Depressed height**
Refer to SDS (BR-72).
Under force of 490 N (50 kg, 110 lb) with engine running

C_1, C_2: **Clearance between pedal stopper and threaded end of stop lamp switch and ASCD switch**
0.3 - 1.0 mm (0.012 - 0.039 in)

A: **Pedal free play**
1 - 3 mm (0.04 - 0.12 in)

1. Loosen lock nut and adjust pedal free height by turning brake booster input rod. Then tighten lock nut.
2. Check pedal free play.

Make sure that stop lamps go off when pedal is released.

3. Check brake pedal's depressed height while engine is running. If lower than specification, check brake system for leaks, accumulation of air or any damage to components (master cylinder, wheel cylinder, etc.); then make necessary repairs.

Removal

CAUTION:

- **Be careful not to splash brake fluid on painted areas; it may cause paint damage. If brake fluid is splashed on painted areas, wash it away with water immediately.**
- **In the case of brake fluid leakage from the master cylinder, disassemble the cylinder. Then check piston cups for deformation or scratches and replace necessary parts.**

1. Connect a vinyl tube to air bleeder valve.
   Without ABS: Master cylinder
   With ABS: Brake caliper
2. Drain brake fluid from each air bleeder valve, depressing brake pedal to empty fluid from master cylinder.
3. Remove brake pipe flare nuts.
4. Remove master cylinder mounting nuts.

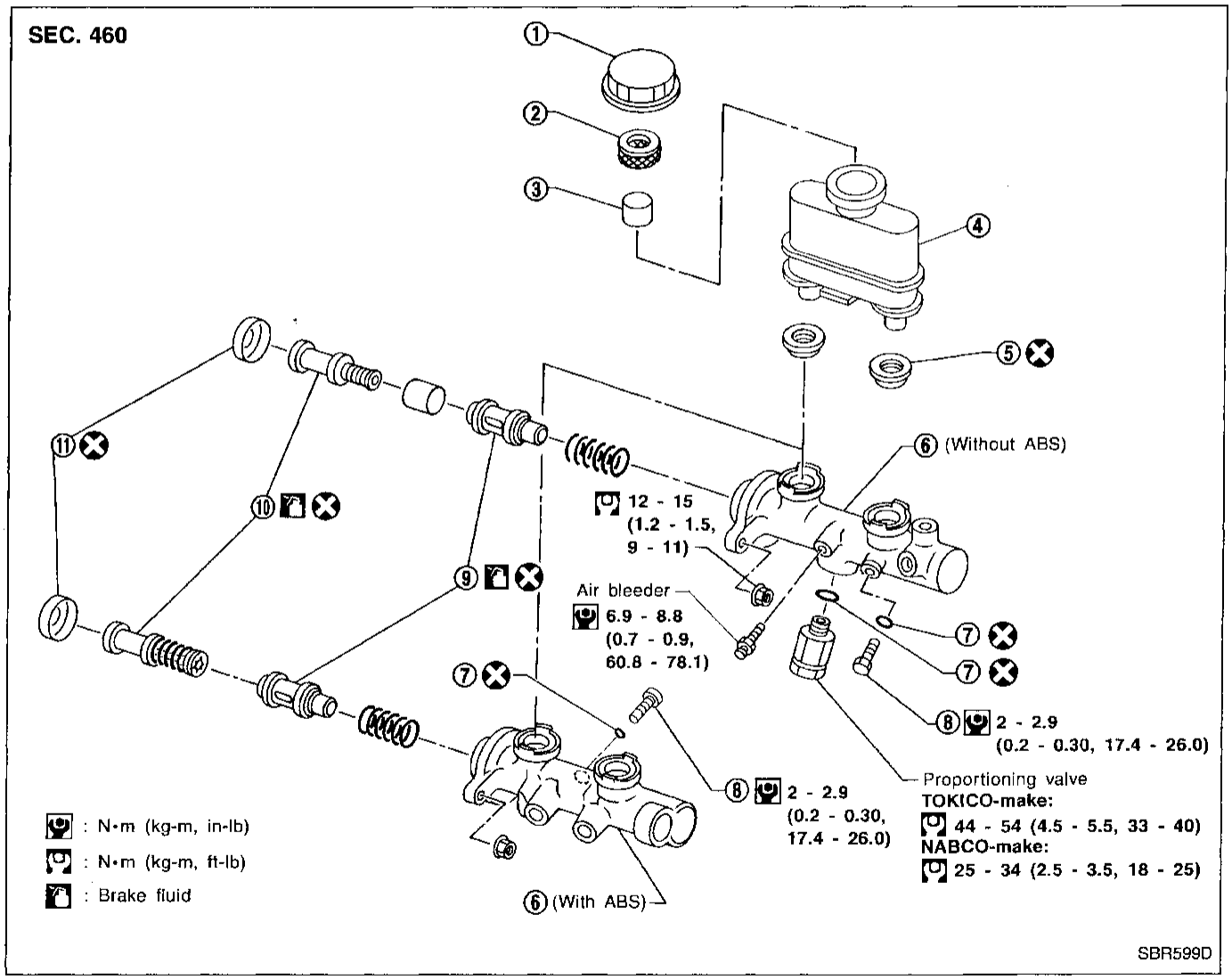

① Reservoir cap
② Oil filter
③ Float
④ Reservoir tank
⑤ Seal
⑥ Cylinder body
⑦ O-ring
⑧ Piston stopper
⑨ Secondary piston assembly
⑩ Primary piston assembly
⑪ Stopper cap

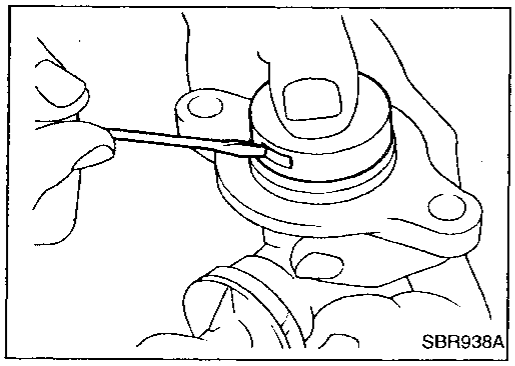

Disassembly

1. Bend claws of stopper cap outward.

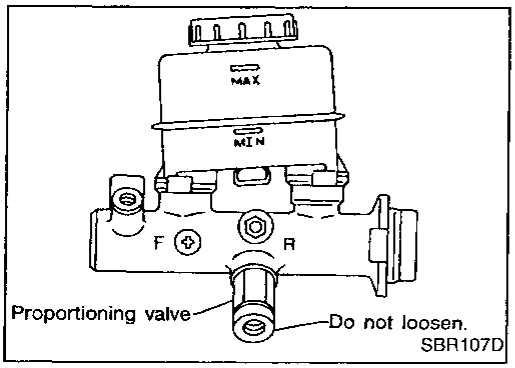

Models without ABS:

2.
a. Remove proportioning valve.
b. Remove piston stopper while piston is pushed into cylinder.

CAUTION:
Do not loosen valve tip when removing proportioning valve.

Models with ABS:

- Remove piston stopper while piston is pushed into cylinder.

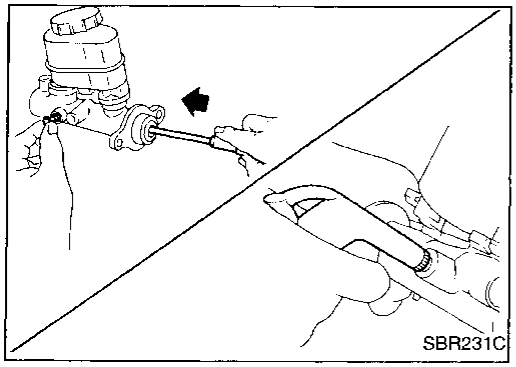

3. Remove piston assemblies.

If it is difficult to remove secondary piston assembly, gradually apply compressed air through fluid outlet.

4. Draw out reservoir tank.

Inspection

Check master cylinder inner wall for pin holes or scratches. Replace if damaged.

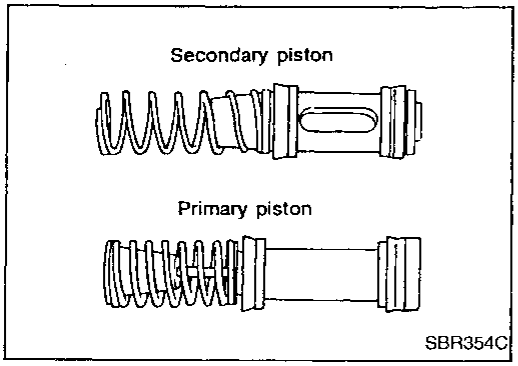

Assembly

1. Insert secondary piston assembly. Then insert primary piston assembly.

- **Pay attention to direction of piston cups in figure at left. Also, insert pistons squarely to avoid scratches on cylinder bore.**
- **Pay attention to alignment of secondary piston slit with valve stopper mounting hole of cylinder body.**

Assembly (Cont'd)

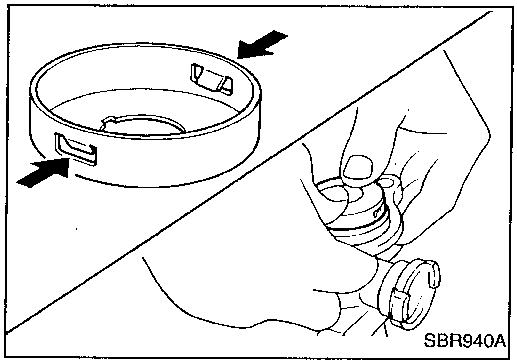

2. Install stopper cap.

Before installing stopper cap, ensure that claws are bent inward.

3. Push reservoir tank seals into cylinder body.
4. Push reservoir tank into cylinder body.

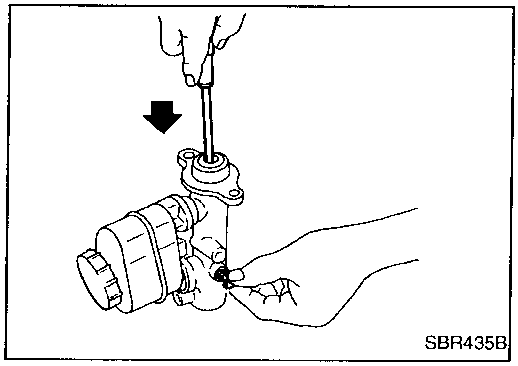

5. Install valve stopper while piston is pushed into cylinder.

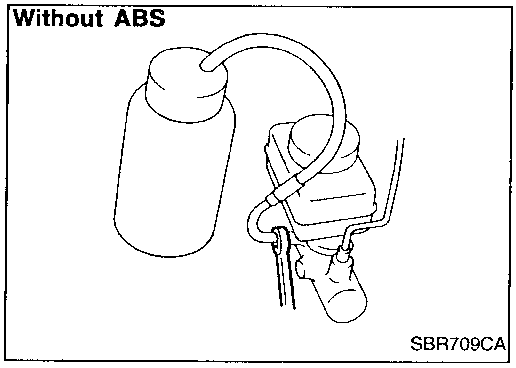

Installation

CAUTION:

- **Refill with new brake fluid "DOT 3".**
- **Never reuse drained brake fluid.**

1. Place master cylinder onto brake booster and secure mounting nuts lightly.
2. Torque mounting nuts.
   : 12 - 15 N·m (1.2 - 1.5 kg-m, 9 - 11 ft-lb)
3. Bleed air from master cylinder.

— Models without ABS —

a. Fit brake lines to master cylinder.
b. Torque flare nuts.
   : 15 - 17 N·m (1.5 - 1.7 kg-m, 11 - 12 ft-lb)
c. Fill up reservoir tank with new brake fluid.
d. Connect a vinyl tube to air bleeder of master cylinder.
e. Open air bleeder of master cylinder.
f. Have driver slowly depress brake pedal and hold.
g. Close air bleeder.
h. Have driver release brake pedal slowly.
i. Repeat steps d. through g. until no air bubbles come out of air bleeder.
j. Torque air bleeder.
   : 7 - 9 N·m (0.7 - 0.9 kg-m, 61 - 78 in-lb)

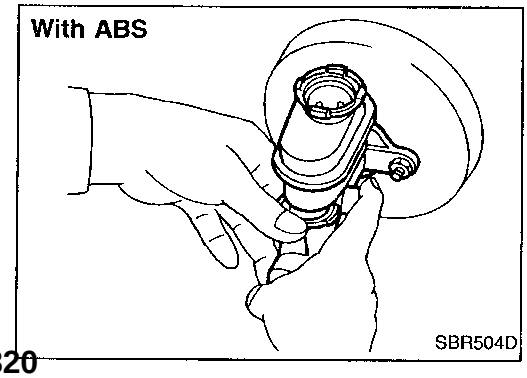

— Models with ABS —

a. Fill up reservoir tank with new brake fluid.
b. Plug all ports on master cylinder with fingers to prevent air suction while releasing brake pedal.
c. Have driver depress brake pedal slowly several times until no air comes out of master cylinder.
d. Fit brake lines to master cylinder.
4. Bleed air from each caliper. Refer to "Bleeding Brake System", BR-6.

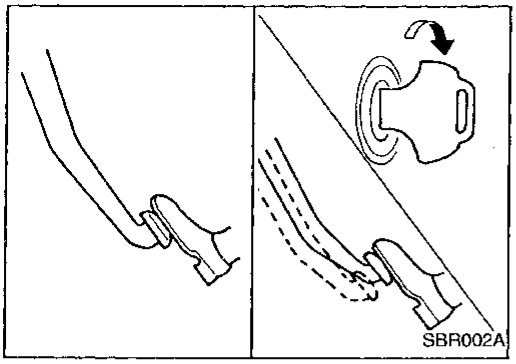

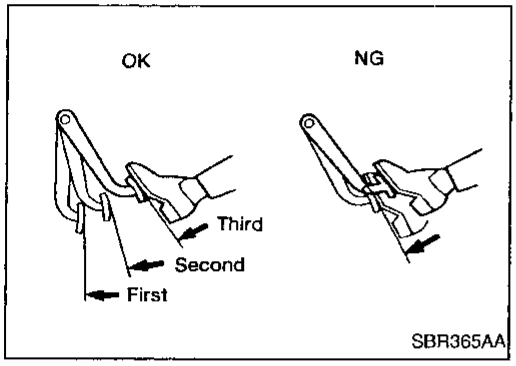

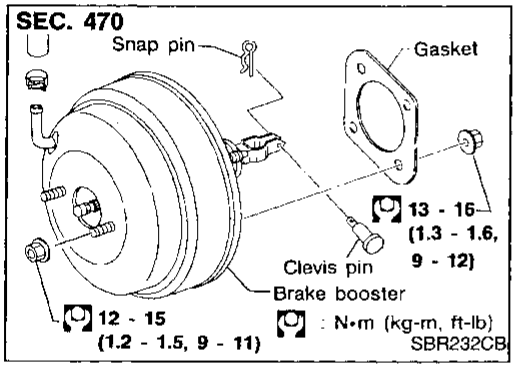

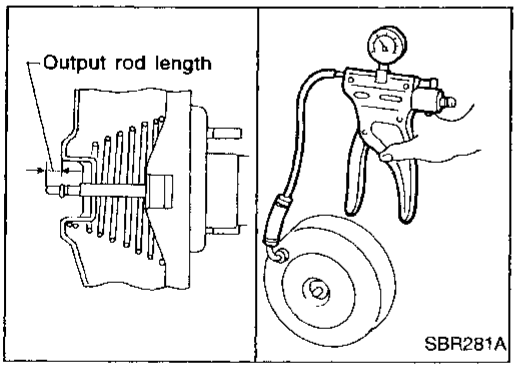

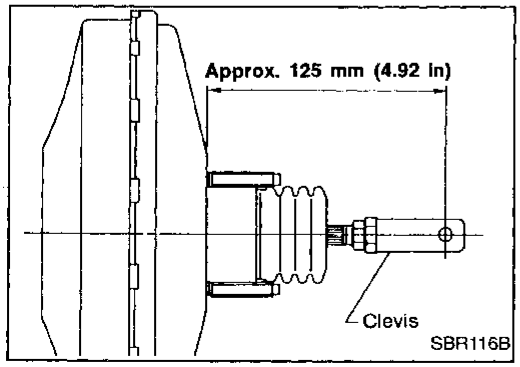

Brake Booster

ON-VEHICLE SERVICE

Operating check

- Depress brake pedal several times with engine off. After exhausting vacuum, make sure there is no change in pedal stroke.
- Depress brake pedal, then start engine. If pedal goes down slightly, operation is normal.

Airtight check

- Start engine, and stop it after one or two minutes. Depress brake pedal several times slowly. Booster is airtight if pedal stroke is less each time.
- Depress brake pedal while engine is running, and stop engine with pedal depressed. The pedal stroke should not change after holding pedal down for **30 seconds**.

REMOVAL

CAUTION:

- **Be careful not to splash brake fluid on painted areas; it may cause paint damage. If brake fluid is splashed on painted areas, wash it away with water immediately.**
- **Be careful not to deform or bend brake pipes, during removal of booster.**

INSPECTION

Output rod length check

1. Apply vacuum of –66.7 kPa (–500 mmHg, –19.69 inHg) to brake booster with a hand vacuum pump.
2. Check output rod length.
   Specified length:
   10.275 - 10.525 mm (0.4045 - 0.4144 in)

INSTALLATION

CAUTION:

- **Be careful not to deform or bend brake pipes during installation of booster.**
- **Replace clevis pin if damaged.**
- **Refill with new brake fluid "DOT 3".**
- **Never reuse drained brake fluid.**
- **Take care not to damage brake booster mounting bolt thread when installing. Due to the narrow angle of installation, the threads can be damaged by the dash panel.**

Brake Booster (Cont'd)

1. Before fitting booster, temporarily adjust clevis to dimension shown.
2. Fit booster, then secure mounting nuts (brake pedal bracket to brake booster) lightly.
3. Connect brake pedal and booster input rod with clevis pin.
4. Secure mounting nuts.
   Specification: 13 - 16 N·m (1.3 - 1.6 kg-m, 9 - 12 ft-lb)
5. Install master cylinder. Refer to "Installation" in "MASTER CYLINDER", BR-8.
6. Bleed air. Refer to "Bleeding Brake System", BR-6.

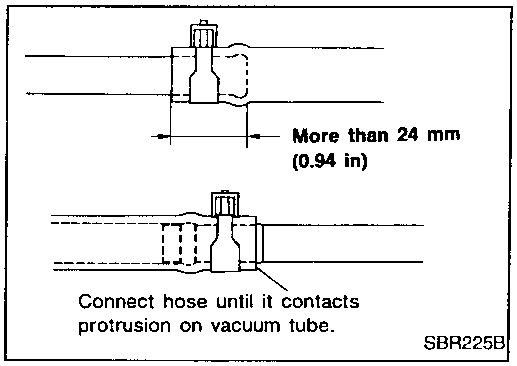

Vacuum Hose

REMOVAL AND INSTALLATION

CAUTION:
When installing vacuum hoses, pay attention to the following points.

- **Do not apply any oil or lubricants to vacuum hose and check valve.**
- **Insert vacuum tube into vacuum hose as shown.**

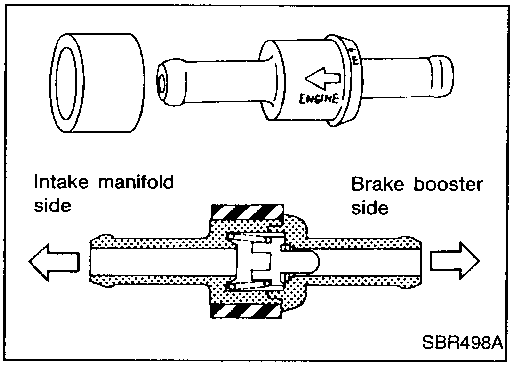

- **Install check valve, paying attention to its direction.**

INSPECTION

Hoses and connectors

Check vacuum lines, connections and check valve for airtightness, improper attachment chafing and deterioration.

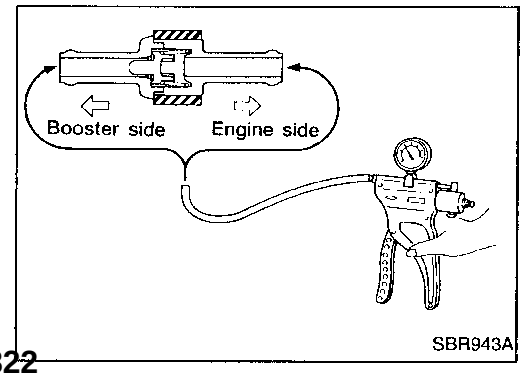

Check valve

Check vacuum with a vacuum pump.

Connect to booster side	Vacuum should exist.
Connect to engine side	Vacuum should not exist.

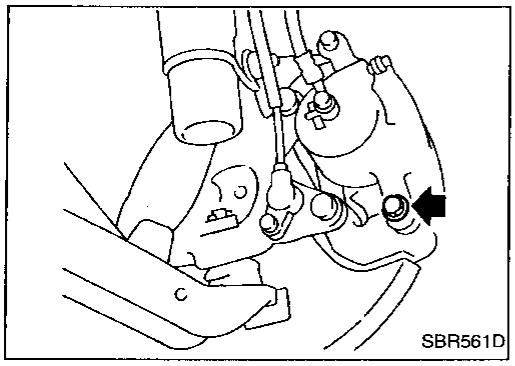

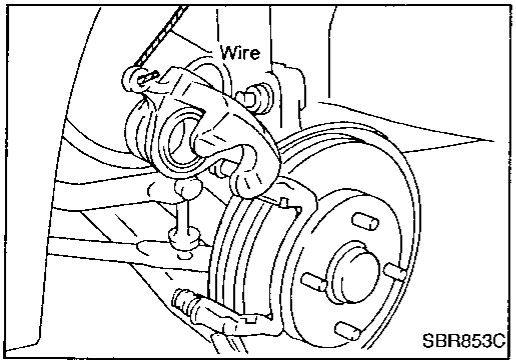

Pad Replacement

WARNING:
Clean brake pads with a vacuum dust collector to minimize the hazard of airborne particles or other materials.

CAUTION:

- **When cylinder body is open, do not depress brake pedal or piston will pop out.**
- **Be careful not to damage piston boot or get oil on rotor. Always replace shims when replacing pads.**
- **If shims are rusted or show peeling of the rubber coat, replace them with new shims.**
- **It is not necessary to remove connecting bolt except for disassembly or replacement of caliper assembly. In this case, suspend cylinder body with wire so as not to stretch brake hose.**

1. Remove master cylinder reservoir cap.
2. Remove lower pin bolt.
3. Open cylinder body upward. Then remove pad retainers, and inner and outer shims.

   Standard pad thickness:
   10 mm (0.39 in)
   Pad wear limit:
   2.0 mm (0.079 in)

Carefully monitor brake fluid level because brake fluid will return to reservoir when pushing back piston.

Pad Replacement (Cont'd)

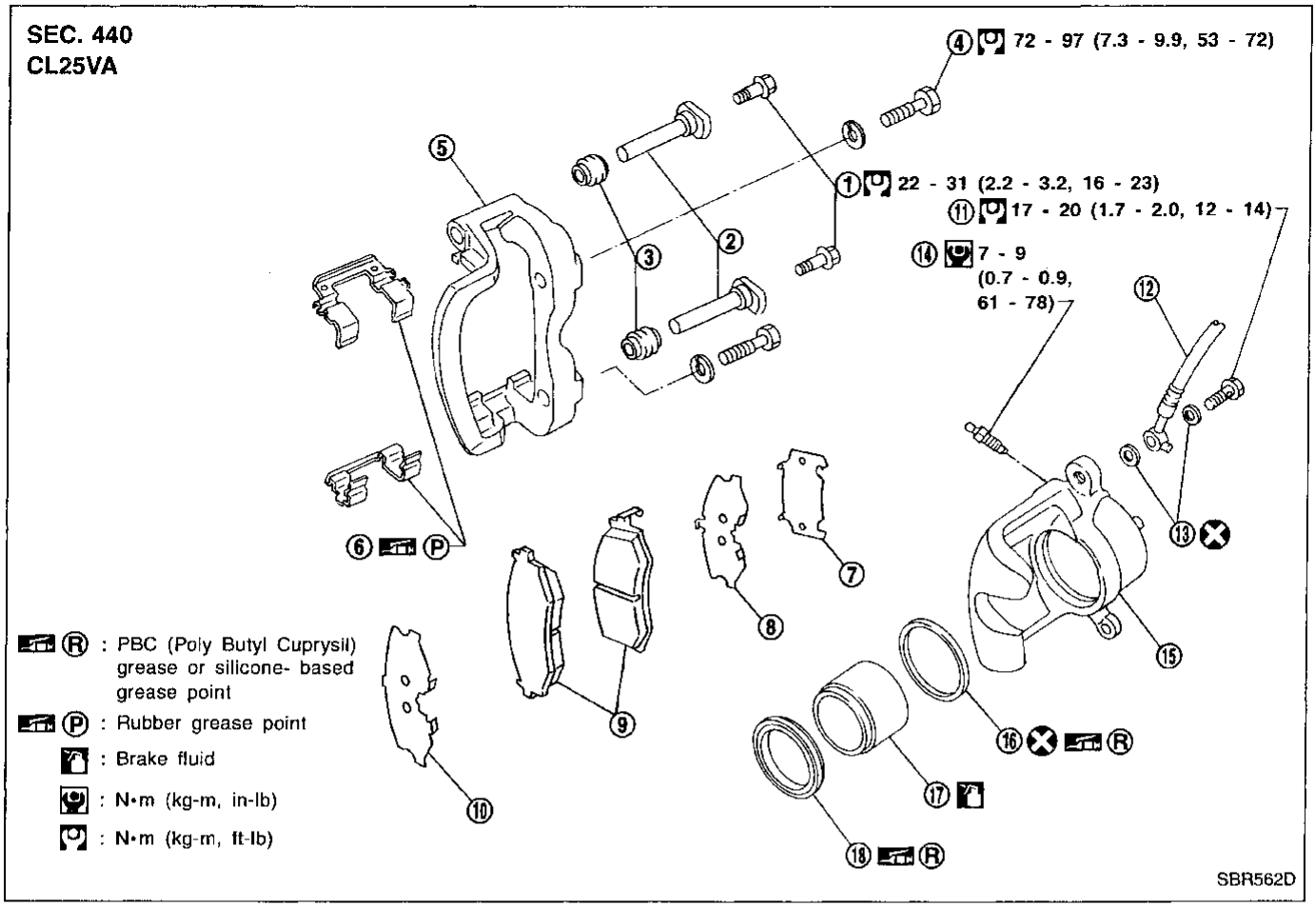

① Main pin bolt
② Pin
③ Pin boot
④ Torque member fixing bolt
⑤ Torque member
⑥ Pad retainer
⑦ Shim cover
⑧ Inner shim
⑨ Pad
⑩ Outer shim
⑪ Connecting bolt
⑫ Brake hose
⑬ Copper washer
⑭ Air bleeder
⑮ Cylinder body
⑯ Piston seal
⑰ Piston
⑱ Piston boot

Removal

WARNING:
Clean brake pads with a vacuum dust collector to minimize the hazard of airborne particles or other materials.

CAUTION:
Suspend caliper assembly with wire so as not to stretch brake hose.

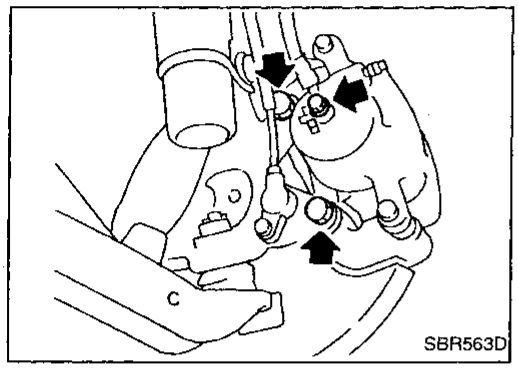

Remove torque member fixing bolts and connecting bolt.

It is not necessary to remove connecting bolt except for disassembly or replacement of caliper assembly. In this case, suspend caliper assembly with wire so as not to stretch brake hose.

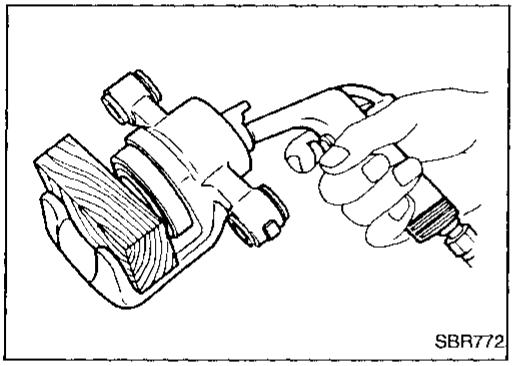

Disassembly

WARNING:
Do not place your fingers in front of piston.

CAUTION:
Do not scratch or score cylinder wall.

1. Push out piston with piston boot with compressed air.
2. Remove piston seal with a suitable tool.

Inspection — Caliper

CYLINDER BODY

- Check inside surface of cylinder for score, rust, wear, damage or presence of foreign objects. If any of the above conditions are observed, replace cylinder body.
- Minor damage from rust or foreign materials may be eliminated by polishing surface with a fine emery paper. Replace cylinder body if necessary.

CAUTION:
Use brake fluid to clean. Never use mineral oil.

PISTON

CAUTION:
Piston sliding surface is plated. Do not polish with emery paper even if rust or foreign materials are stuck to sliding surface.

Check piston for score, rust, wear, damage or presence of foreign objects. Replace if any of the above conditions are observed.

SLIDE PIN, PIN BOLT AND PIN BOOT

Check for wear, cracks or other damage. Replace if any of the above conditions are observed.

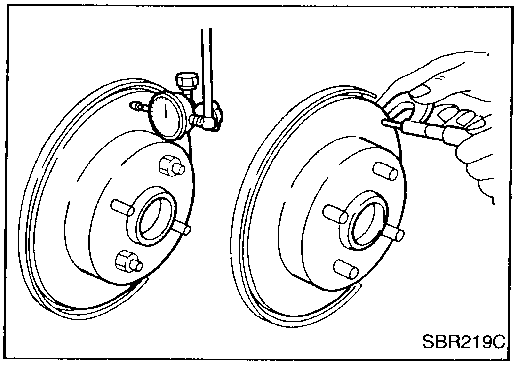

Inspection — Rotor

RUBBING SURFACE

Check rotor for roughness, cracks or chips.

RUNOUT

1. Secure rotor to wheel hub with at least two nuts (M12 x 1.25).
2. Check runout using a dial indicator.

Make sure that wheel bearing axial end play is within the specifications before measuring. Refer to FA section ("Front Wheel Bearing", "ON-VEHICLE SERVICE").

Maximum runout:
0.07 mm (0.0028 in)

3. If the runout is out of specification, find minimum runout position as follows:
   a. Remove nuts and rotor from wheel hub.
   b. Shift the rotor one hole and secure rotor to wheel hub with nuts.
   c. Measure runout.
   d. Repeat steps a. to c. so that minimum runout position can be found.
4. If the runout is still out of specification, turn rotor with on-car brake lathe ("MAD, DL-8700", "AMMCO 700 and 705" or equivalent).

THICKNESS

Thickness variation (At least 8 positions):
Maximum 0.01 mm (0.0004 in)

If thickness variation exceeds the specification, turn rotor with on-car brake lathe.

Rotor repair limit:
20.0 mm (0.787 in)

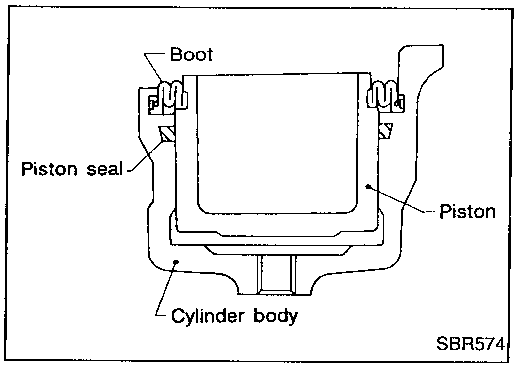

Assembly

1. Insert piston seal into groove on cylinder body.
2. With piston boot fitted to piston, insert piston boot into groove on cylinder body and install piston.
3. Properly secure piston boot.

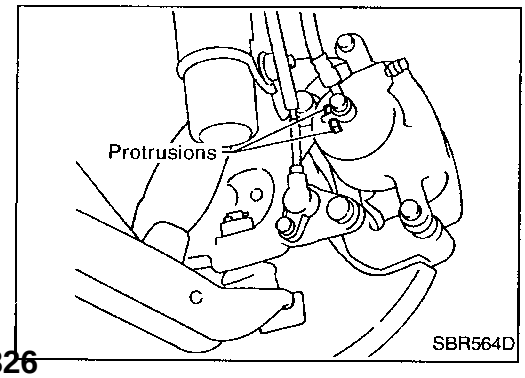

Installation

CAUTION:

- **Refill with new brake fluid "DOT 3".**
- **Never reuse drained brake fluid.**

1. Install brake hose to caliper securely.

Fit brake hose between the caliper protrusions.

2. Install all parts and secure all bolts.
3. Bleed air. Refer to "Bleeding Brake System", BR-6.

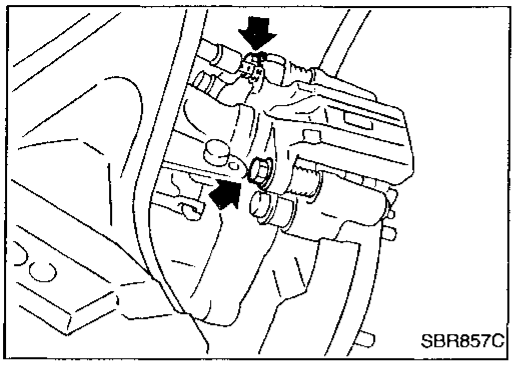

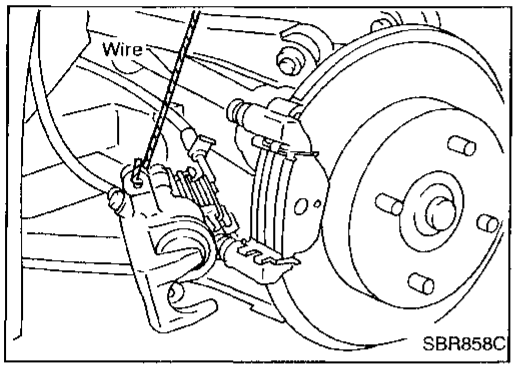

Pad Replacement

WARNING:
Clean brake pads with a vacuum dust collector to minimize the hazard of airborne particles or other materials.

CAUTION:

- **When cylinder body is open, do not depress brake pedal, otherwise piston will pop out.**
- **Be careful not to damage piston boot or get oil on rotor. Always replace shims when replacing pads.**
- **If shims are rusted or show peeling of rubber coat, replace them with new shims.**
- **It is not necessary to remove connecting bolt except for disassembly or replacement of caliper assembly. In this case, suspend cylinder body with wire so as not to stretch brake hose.**
- **Carefully monitor brake fluid level because brake fluid will return to reservoir when pushing back piston.**

1. Remove master cylinder reservoir cap.
2. Release parking brake.
3. Remove brake cable mounting bolts from the rear suspension.
4. Remove pin bolts.
5. Remove cylinder body. Then remove pad retainers, and inner and outer shims.
   Standard pad thickness:
   9.5 mm (0.374 in)
   Pad wear limit:
   2.0 mm (0.079 in)

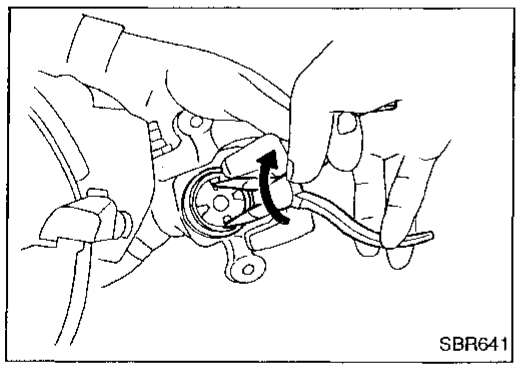

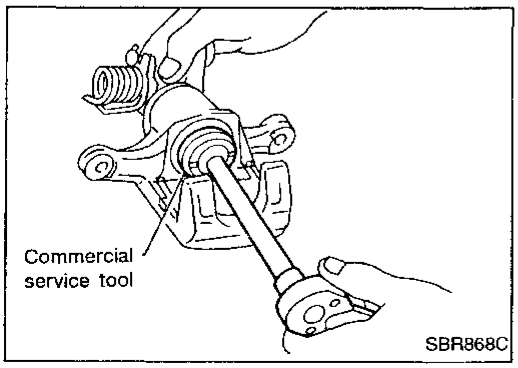

6. When installing new pads, push piston into cylinder body by gently turning piston clockwise, as shown.

Carefully monitor brake fluid level because brake fluid will return to reservoir when pushing back piston.

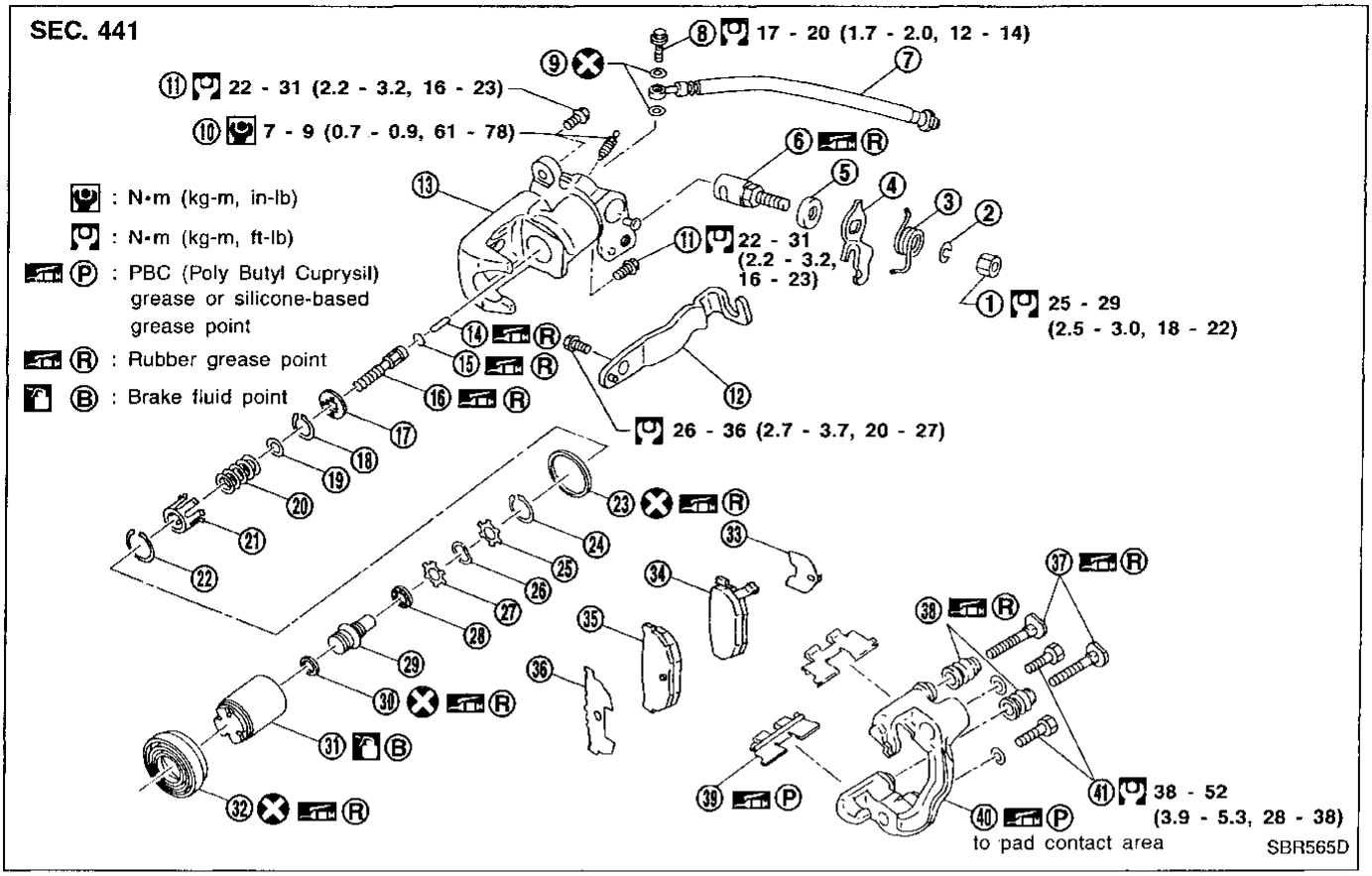

① Nut
② Washer
③ Return spring
④ Parking brake lever
⑤ Cam boot
⑥ Cam
⑦ Brake hose
⑧ Connecting bolt
⑨ Copper washer
⑩ Bleed screw
⑪ Pin bolt
⑫ Cable mounting bracket
⑬ Cylinder
⑭ Strut
⑮ O-ring
⑯ Push rod
⑰ Key plate
⑱ Ring C
⑲ Seat
⑳ Spring
㉑ Spring cover
㉒ Ring B
㉓ Piston seal
㉔ Ring A
㉕ Spacer
㉖ Wave washer
㉗ Spacer
㉘ Ball bearing
㉙ Adjusting nut
㉚ Cup
㉛ Piston
㉜ Dust seal
㉝ Inner shim
㉞ Inner pad
㉟ Outer pad
㊱ Outer shim
㊲ Pin
㊳ Pin boot
㊴ Pad retainer
㊵ Torque member
㊶ Torque member fixing bolt

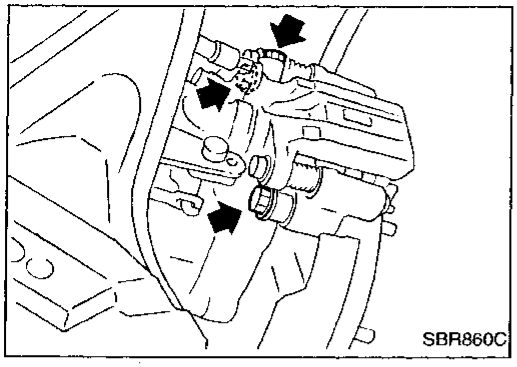
SBR860C

Removal

WARNING:
Clean brake pads with a vacuum dust collector to minimize the hazard of airborne particles or other materials.

1. Remove brake cable mounting bracket bolt and lock spring.
2. Remove torque member fixing bolts and connecting bolt.

It is not necessary to remove connecting bolt except for disassembly or replacement of caliper assembly. In this case, suspend caliper assembly with wire so as not to stretch brake hose.

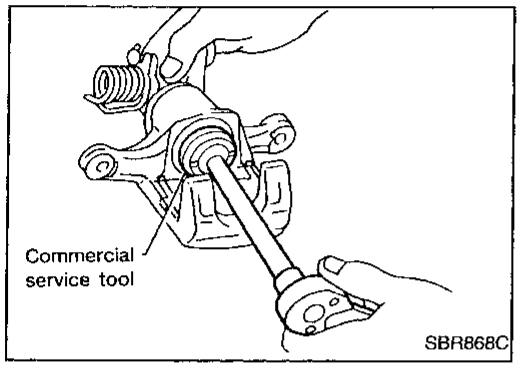

SBR868C

Disassembly

1. Remove piston by turning it counterclockwise with suitable commercial service tool or long nose pliers.

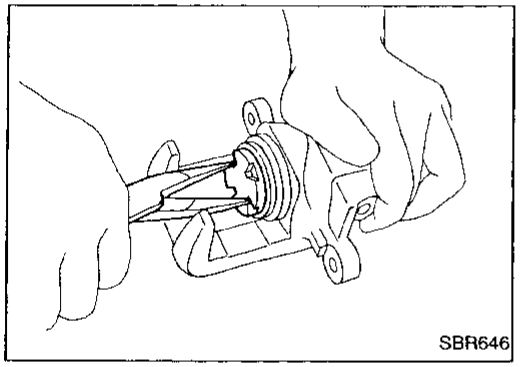
SBR646

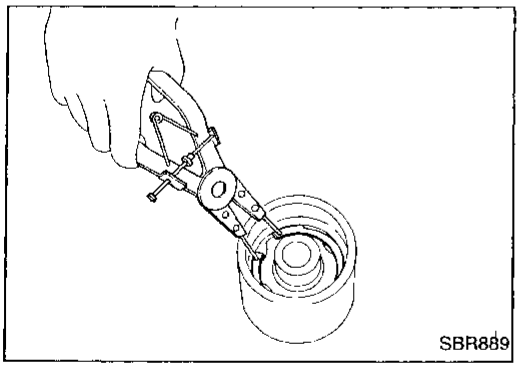
SBR889

2. Remove ring A from piston with suitable pliers and remove adjusting nut.

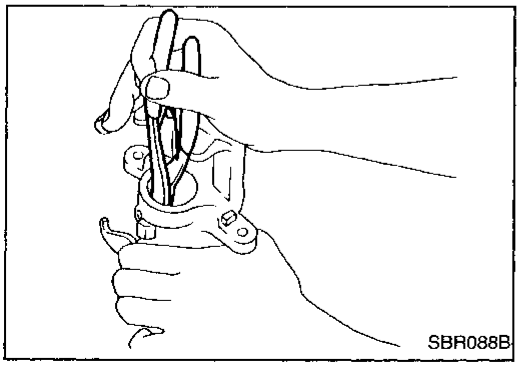
SBR088B

3. Disassemble cylinder body.
a. Pry off ring B with suitable pliers, then remove spring cover, spring and seat.
b. Remove ring C, then remove key plate, push rod and strut.

Disassembly (Cont'd)

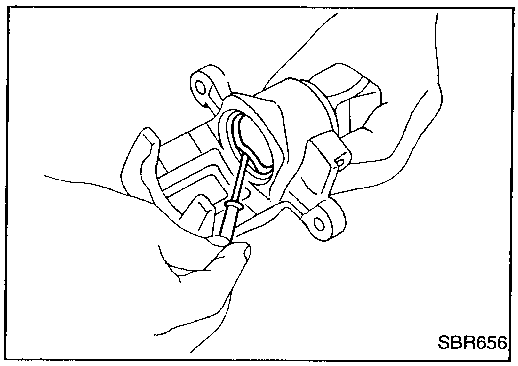

c. Remove piston seal.

Be careful not to damage cylinder body.

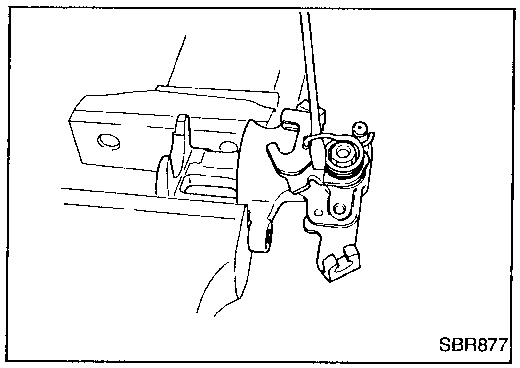

4. Remove return spring, cable mounting bracket and parking brake lever.

Inspection — Caliper

CAUTION:
Use brake fluid to clean cylinder. Never use mineral oil.

CYLINDER BODY

- Check inside surface of cylinder for score, rust, wear, damage or presence of foreign materials. If any of the above conditions are observed, replace cylinder body.
- Minor damage from rust or foreign materials may be eliminated by polishing surface with a fine emery paper.
  Replace cylinder body if necessary.

TORQUE MEMBER

Check for wear, cracks or other damage. Replace if necessary.

PISTON

CAUTION:
Piston sliding surface is plated. Do not polish with emery paper even if rust or foreign matter is stuck to sliding surface.

Check piston for score, rust, wear, damage or presence of foreign materials.
Replace if any of the above conditions are observed.

PIN AND PIN BOOT

Check for wear, cracks or other damage.
Replace if any of the above conditions are observed.

Inspection — Rotor

RUBBING SURFACE

Check rotor for roughness, cracks or chips.

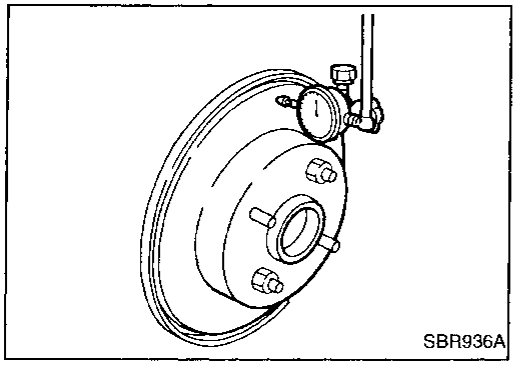

RUNOUT

1. Secure rotor to wheel hub with at least two nuts (M12 x 1.25).
2. Check runout using a dial indicator.

Make sure that wheel bearing axial end play is within the specifications before measuring. Refer to RA section ("Rear Wheel Bearing", "ON-VEHICLE SERVICE").

3. Change relative positions of rotor and wheel hub so that runout is minimized.

   Maximum runout:
   0.07 mm (0.0028 in)

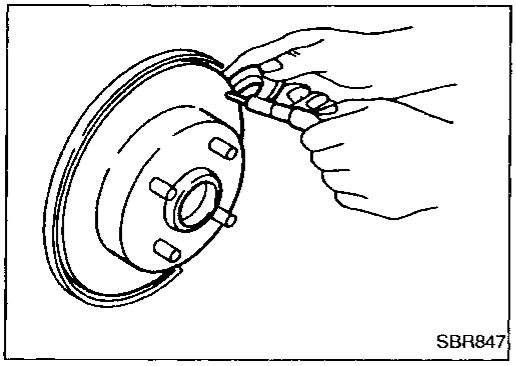

THICKNESS

Rotor repair limit:
Standard thickness
9 mm (0.35 in)
Minimum thickness
8 mm (0.31 in)
Thickness variation (At least 8 positions)
Maximum 0.02 mm (0.0008 in)

Replace rotor if any of the above do not meet the specifications.

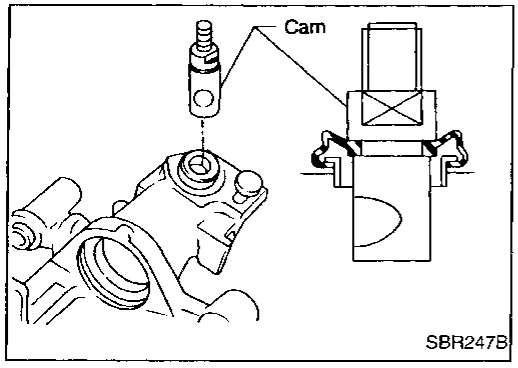

Assembly

1. Insert cam with depression facing towards open end of cylinder.

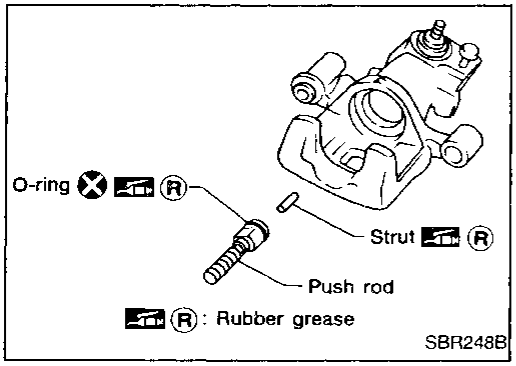

2. Generously apply rubber grease to strut and push rod to make insertion easy.

Assembly (Cont'd)

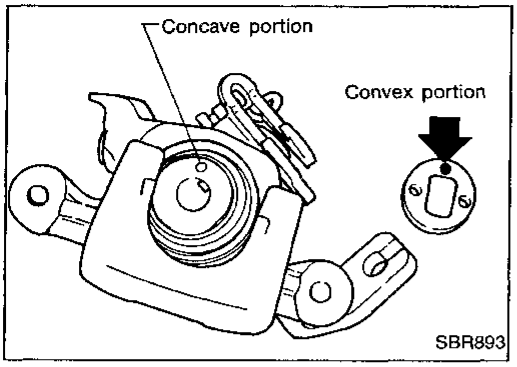

3. Match protrusion on key plate with depression in cylinder.

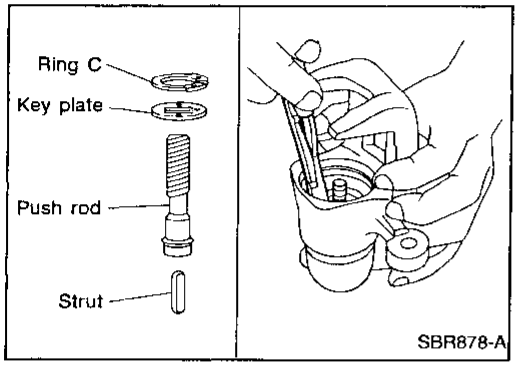

4. Install ring C with a suitable tool.

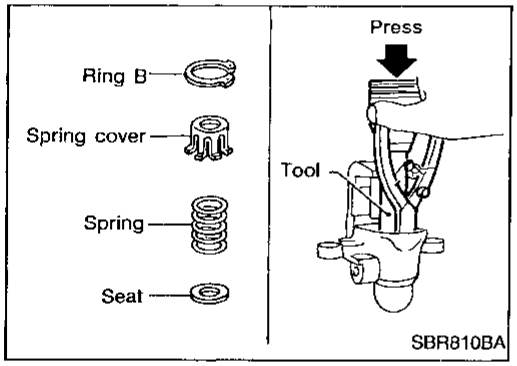

5. Install seat, spring, spring cover and ring B while depressing with suitable tool.

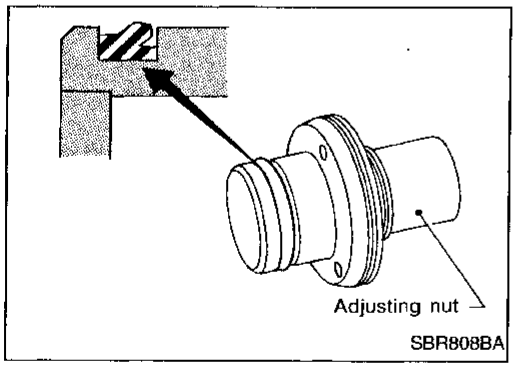

6. Install adjusting nut in the specified direction.

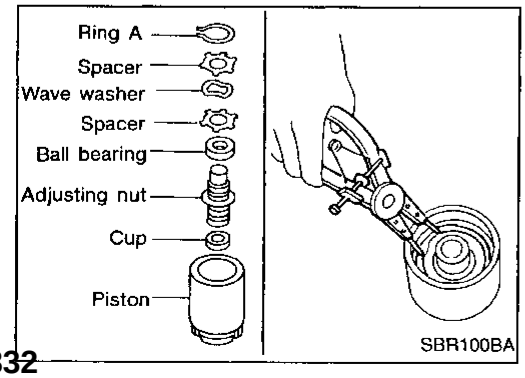

7. Install cup, adjusting nut, bearing, spacers, washer and ring A with a suitable tool.

Assembly (Cont'd)

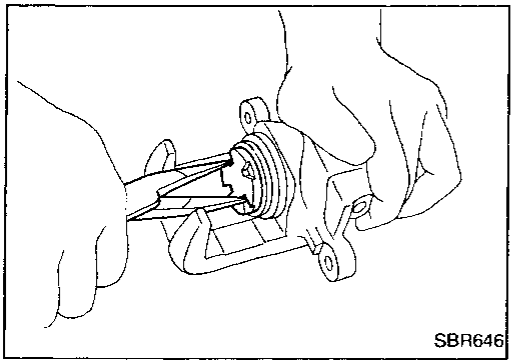

8. Insert piston seal into groove on cylinder body.
9. With dust seal fitted to piston, insert dust seal into groove on cylinder body and fit piston by turning it clockwise with long nose pliers, or suitable tool.

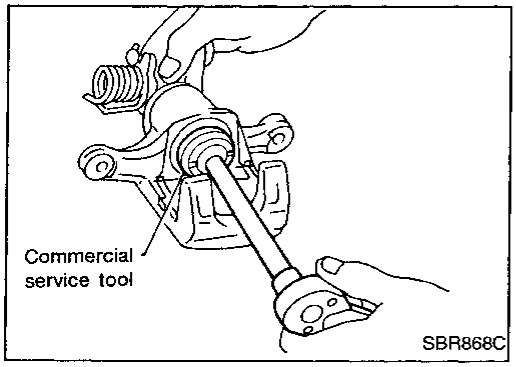

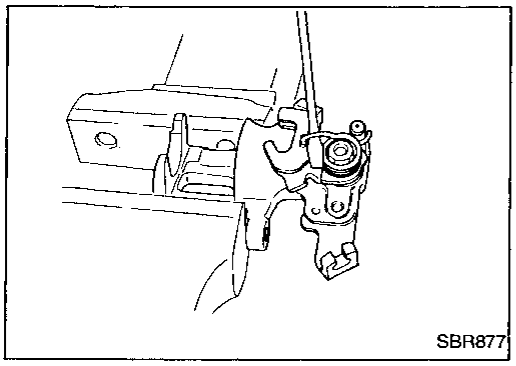

10. Fit parking brake lever, return spring and cable mounting bracket.

Installation

CAUTION:

- **Refill with new brake fluid "DOT 3".**
- **Never reuse drained brake fluid.**

1. Install caliper assembly.
2. Install brake hose to caliper securely.
3. Install all parts and secure all bolts.
4. Bleed air. Refer to "Bleeding Brake System", BR-6.

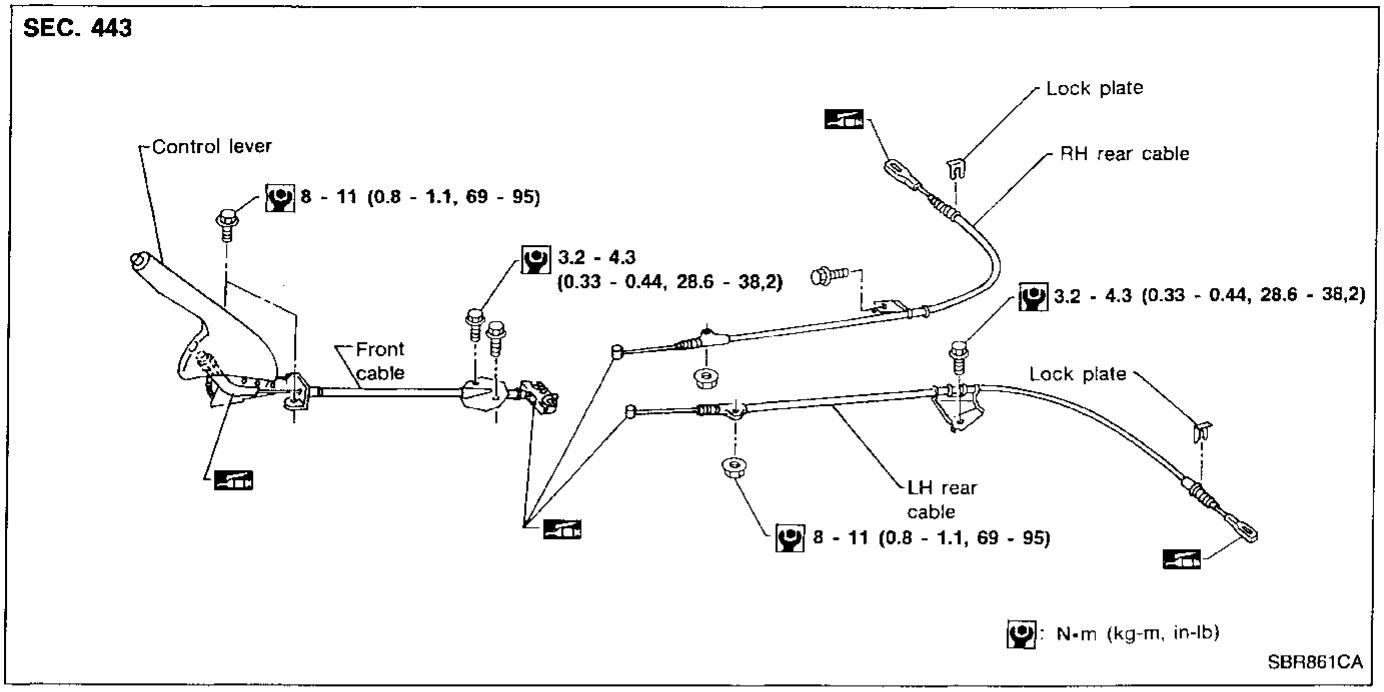

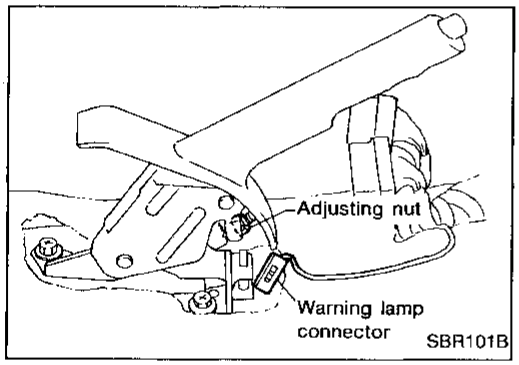

Removal and Installation

1. To remove parking brake cable, first remove center console.
2. Disconnect warning lamp connector.
3. Remove bolts, slacken off and remove adjusting nut.

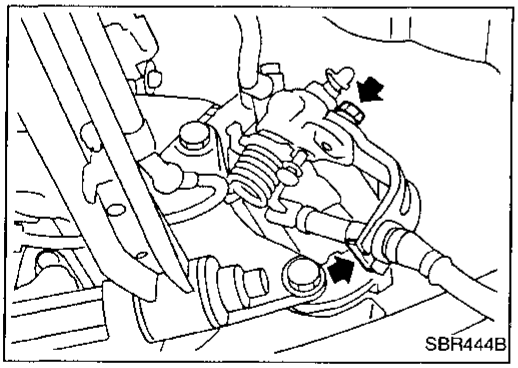

4. Remove lock plate, then disconnect cable from caliper.

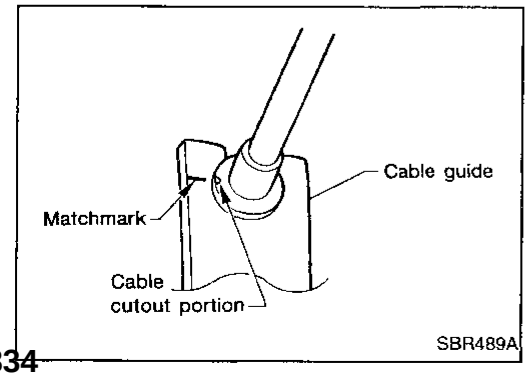

- When installing parking brake cable at rear caliper, make sure to align matchmark on cable guide.

Inspection

1. Check control lever for wear or other damage. Replace if necessary.
2. Check wires for discontinuity or deterioration. Replace if necessary.
3. Check warning lamp and switch. Replace if necessary.
4. Check parts at each connecting portion and, if found deformed or damaged, replace.

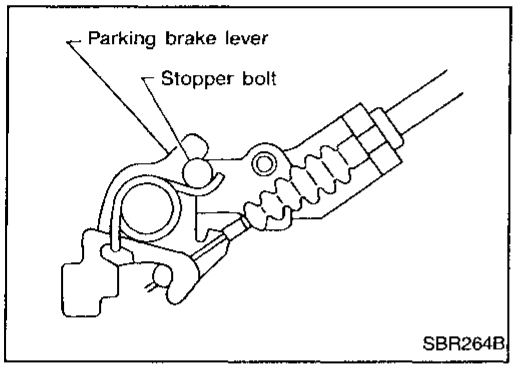

Adjustment

Pay attention to the following points after adjustment.

- There is no drag when control lever is being released.
- Parking brake lever returns to stopper bolt when control lever for rear disc brake is released.

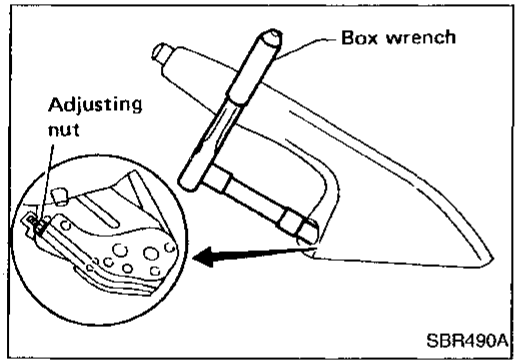

1. Adjust clearance between pad and rotor as follows.
a. Release parking brake lever and loosen adjusting nut.
b. Depress brake pedal fully at least 10 times with engine running.
2. Operate control lever to full stroke position at least 5 times with lever stroke of 199 mm (7.83 in).
3. Pull control lever 4 - 5 notches. Then adjust control lever by turning adjusting nut.

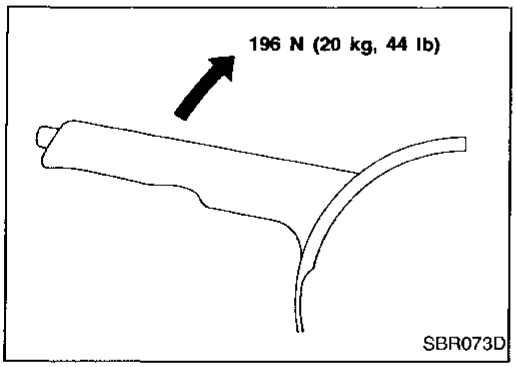

4. Pull control lever with specified amount of force. Check lever stroke and ensure smooth operation.
   Number of notches: 7 - 9

5. Bend warning lamp switchplate to ensure:
- Warning lamp comes on when lever is lifted "A" notches.
- Warning lamp goes out when lever is fully released.
  Number of "A" notches: 1 or less

Purpose

The Anti-Lock Brake System (ABS) consists of electronic and hydraulic components. It allows for control of braking force so locking of the wheels can be avoided.
The ABS:
1) Improves proper tracking performance through steering wheel operation.
2) Eases obstacle avoidance through steering wheel operation.
3) Improves vehicle stability.

Operation

- When the vehicle speed is less than 10 km/h (6 MPH) this system does not work.
- The Anti-Lock Brake System (ABS) has a self-test function. The system turns on the ABS warning lamp for 1 second each time the ignition switch is turned "ON". After the engine is started, the ABS warning lamp turns off. The system performs a test the first time the vehicle reaches 6 km/h (4 MPH). A mechanical noise may be heard as the ABS performs this self-test. This is a normal part of the self-test feature. If a malfunction is found during this check, the ABS warning lamp will stay on.
- While driving, a mechanical noise may be heard during ABS operation. This is a normal condition.

ABS Hydraulic Circuit

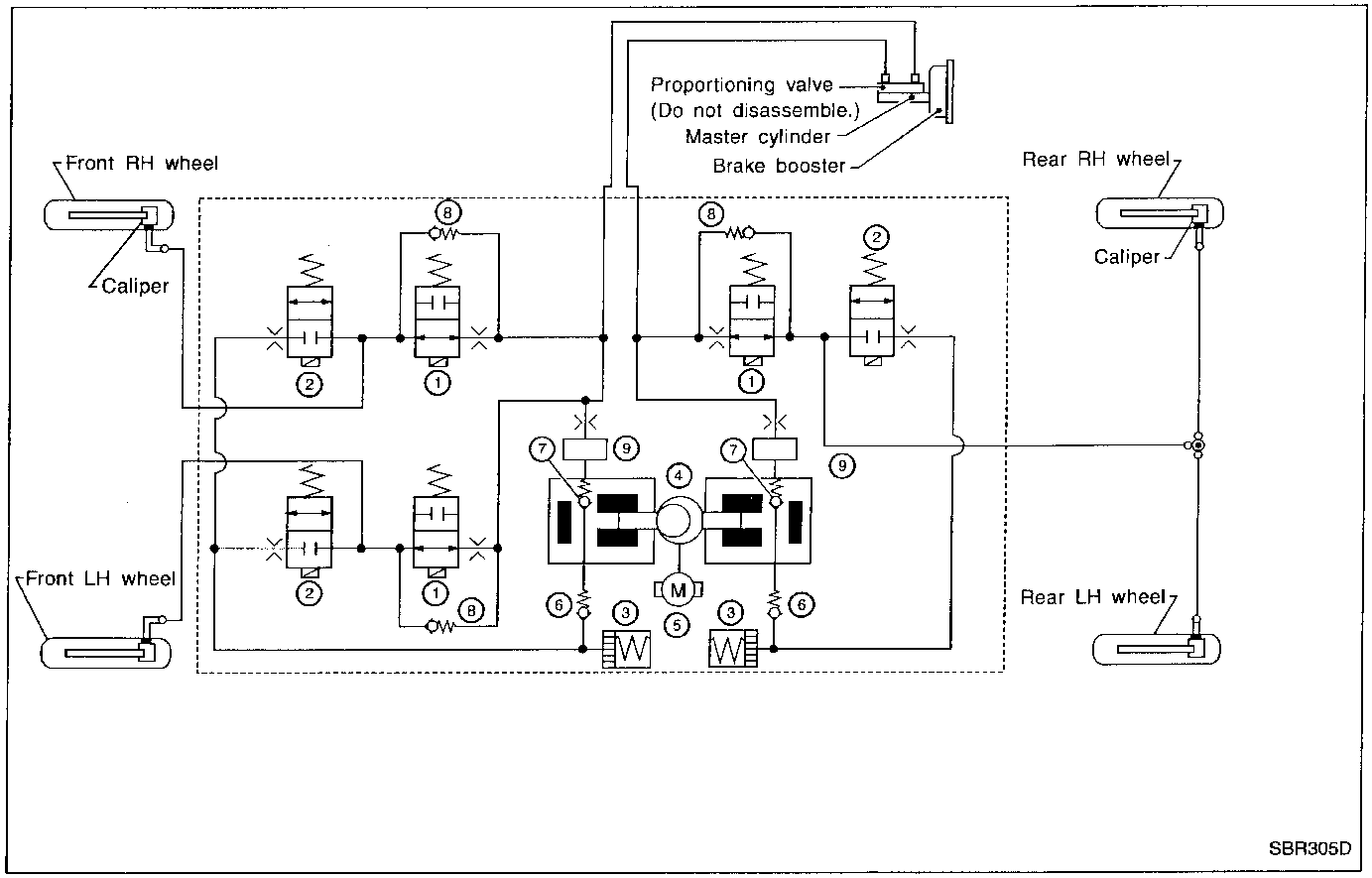

① Inlet solenoid valve
② Outlet solenoid valve
③ Reservoir
④ Pump
⑤ Motor
⑥ Inlet valve
⑦ Outlet valve
⑧ Bypass check valve
⑨ Damper

System Components

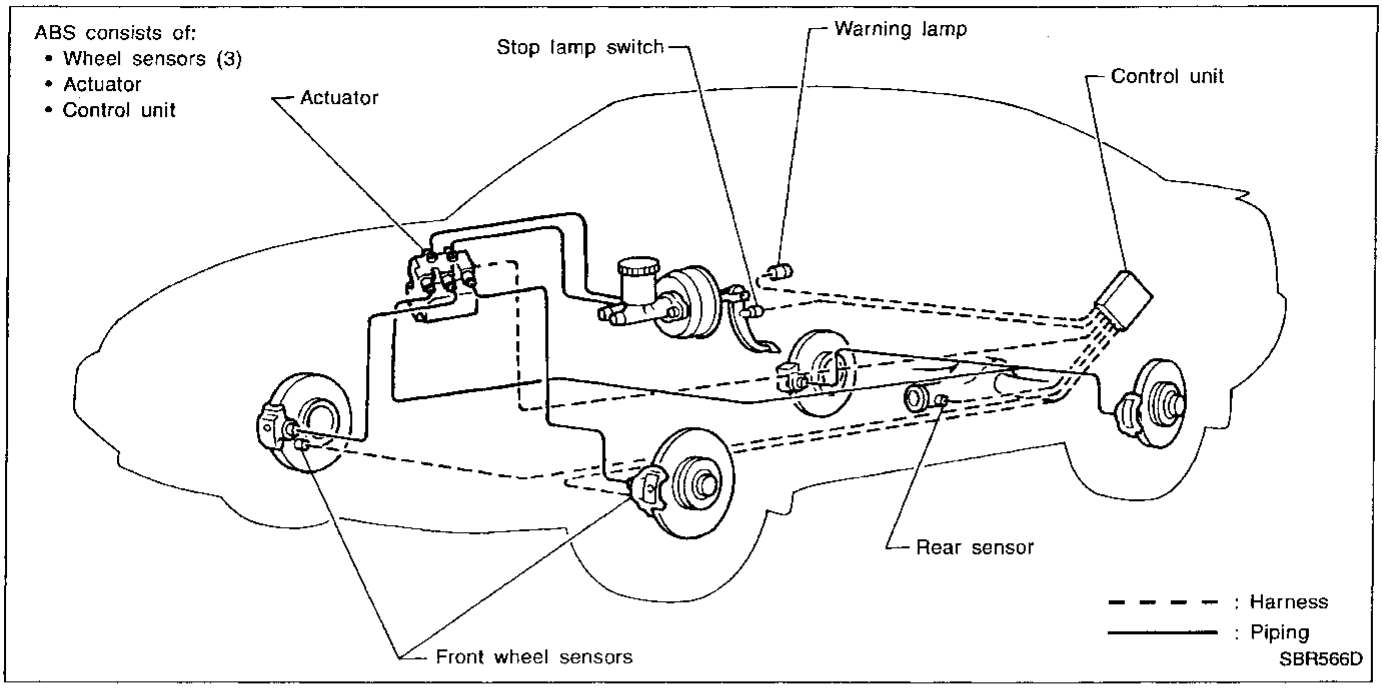

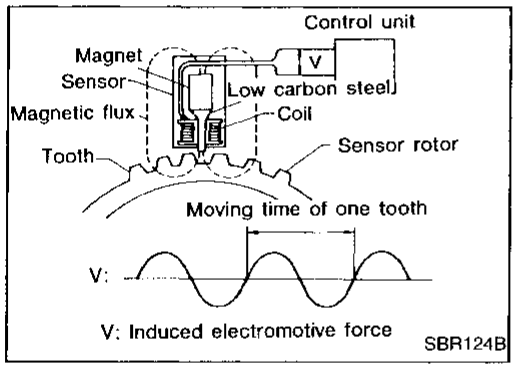

System Description

SENSOR

The sensor unit consists of a gear-shaped sensor rotor and a sensor element. The element contains a bar magnet wound with a coil. The sensor is installed on the back side of the brake rotor or the final drive. As the wheel rotates, the sensor generates a sine-wave pattern. The frequency and voltage increase(s) as the rotating speed increases.

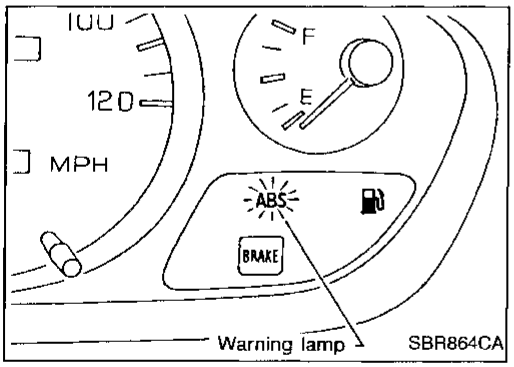

CONTROL UNIT

The control unit computes the wheel rotating speed by the signal current sent from the sensor. Then it supplies a DC current to the actuator solenoid valve. It also controls ON-OFF operation of the valve relay and motor relay. If any electrical malfunction should be detected in the system, the control unit causes the warning lamp to light up. In this condition, the ABS will be deactivated by the control unit, and the vehicle's brake system reverts to normal operation.

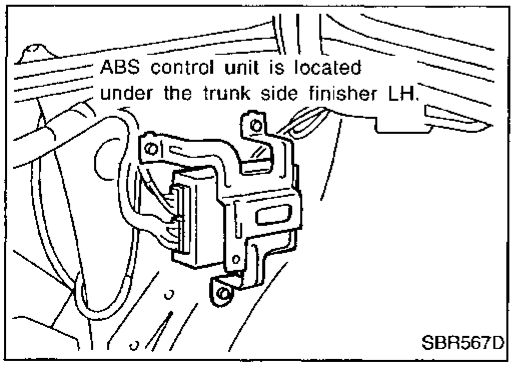

System Description (Cont'd)

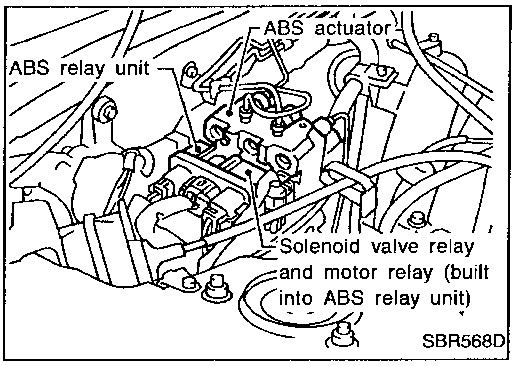

ACTUATOR

The actuator contains:

- An electric motor and pump
- Two relays
- Six solenoid valves, each inlet and outlet for
  - — LH front
  - — RH front
  - — Rear

These components control the hydraulic circuit. The ABS control unit directs the actuator to increase, hold or decrease hydraulic pressure to all or individual wheels.

ABS actuator operation

		Inlet solenoid valve	Outlet solenoid valve	
Normal brake operation		OFF (Open)	OFF (Closed)	Master cylinder brake fluid pressure is directly transmitted to caliper via the inlet solenoid valve.
ABS operation	Pressure hold	ON (Closed)	OFF (Closed)	Hydraulic circuit is shut off to hold the caliper brake fluid pressure.
	Pressure decrease	ON (Closed)	ON (Open)	Caliper brake fluid is sent to reservoir via the outlet solenoid valve. Then it is pushed up to the master cylinder by pump.
	Pressure increase	OFF (Open)	OFF (Closed)	Master cylinder brake fluid pressure is transmitted to caliper.

Removal and Installation

CAUTION:
Be careful not to damage sensor edge and sensor rotor teeth. When removing the front wheel hub or final drive assemblies, first remove the ABS wheel sensor from the assembly. Failure to do so may result in damage to the sensor wires making the sensor inoperative.

WHEEL SENSORS

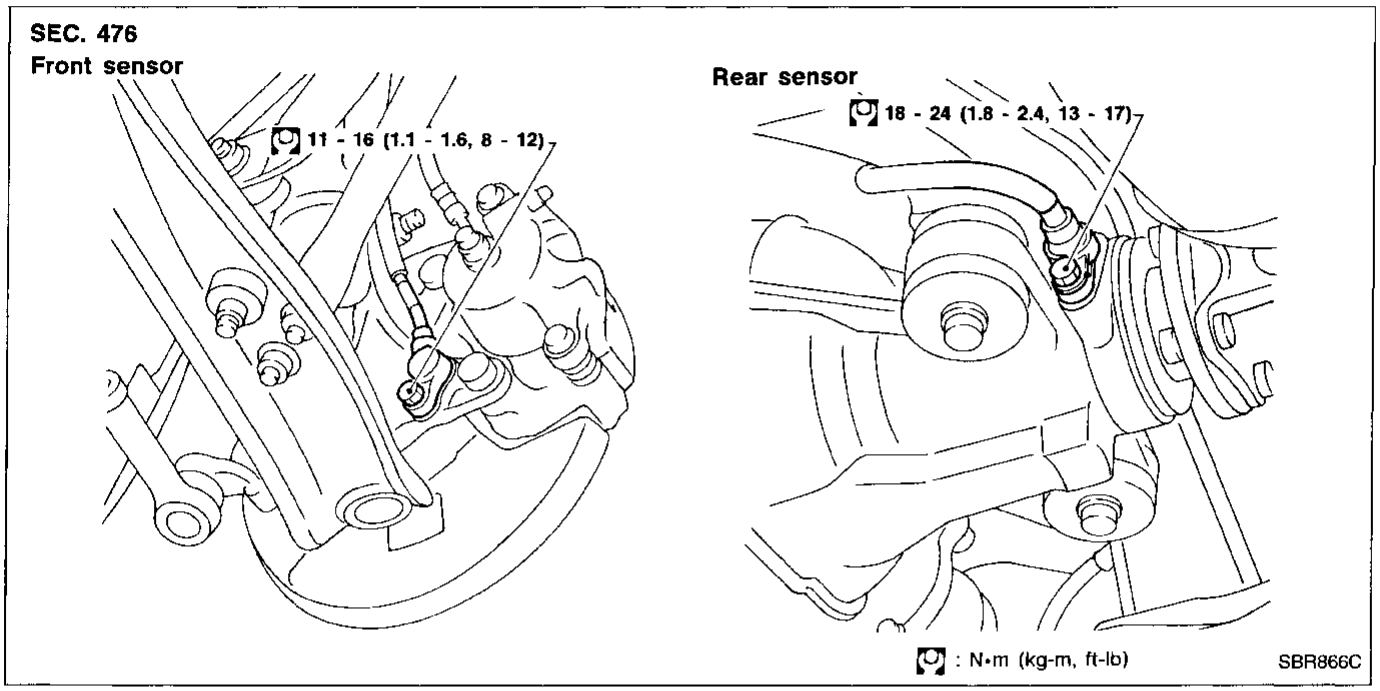

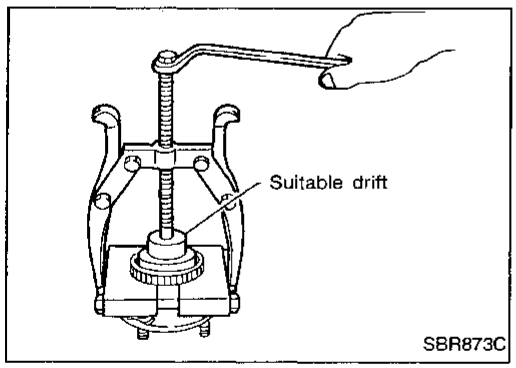

SENSOR ROTOR

Removal

1. Remove the front wheel hub or final drive companion flange. Refer to FA section ("FRONT AXLE") and PD section.
2. Remove the sensor rotor using suitable puller, drift and bearing replacer.

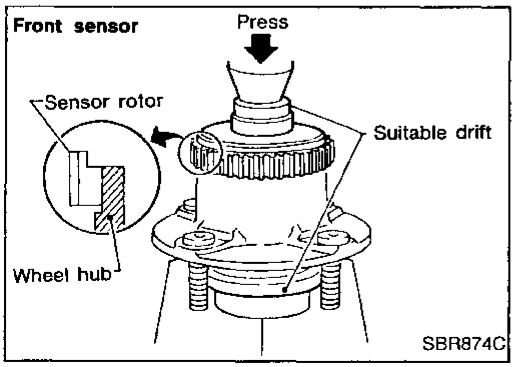

Installation

Install the sensor rotor using suitable drift and press.

- Always replace sensor rotor with new one.
- Pay attention to the direction of front sensor rotor as shown in figure.

Removal and Installation (Cont'd)

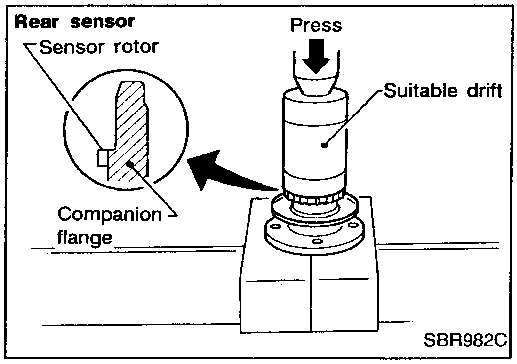

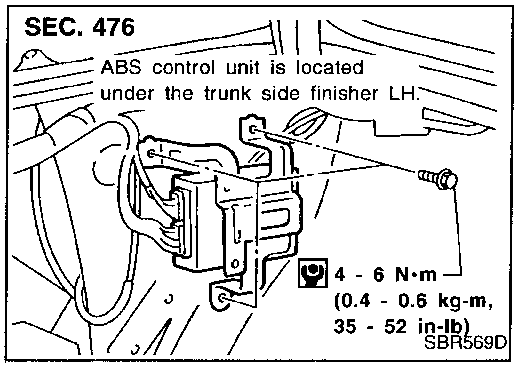

CONTROL UNIT

Location: Under trunk side finisher LH.

CAUTION:

- **When removing or installing connectors, check terminals to ensure that they are not bent or otherwise damaged.**
- **When installing trunk trim clips, be careful not to bend control unit bracket or bump control unit.**

ACTUATOR AND ACTUATOR RELAYS (Relay unit)

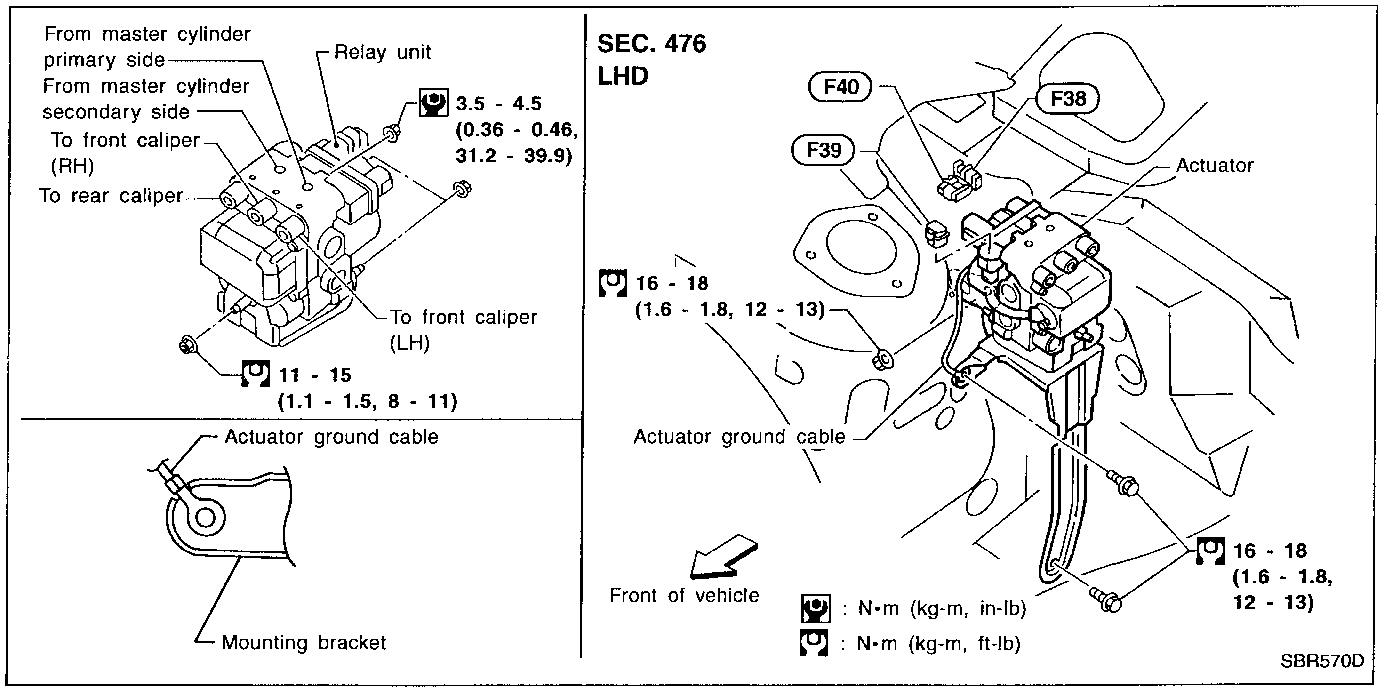

Removal

1. Disconnect battery cable.
2. Drain brake fluid. Refer to "Changing Brake Fluid", BR-5.
3. Remove relay unit from actuator (if only relay unit requires replacement).
4. Apply different colored paint to each pipe connector and actuator to prevent incorrect connection.
5. Disconnect connector, brake pipes and remove fixing nuts and actuator ground cable.
6. Remove actuator.

Removal and Installation (Cont'd)

Installation

CAUTION:

After installing actuator, refill brake fluid. Then bleed air. Refer to "Bleeding Brake System", BR-6.

1. Tighten actuator ground cable.

Place ground cable at a notch of mounting bracket.

2. Connect brake pipes temporarily.
3. Tighten fixing nuts.
4. Tighten brake pipes.
5. Fix relay unit onto actuator.
6. Connect connector and battery cable.

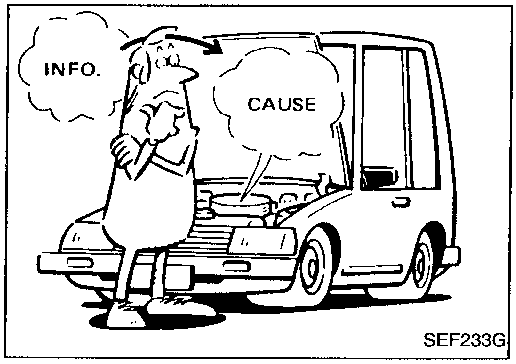

SEF233G

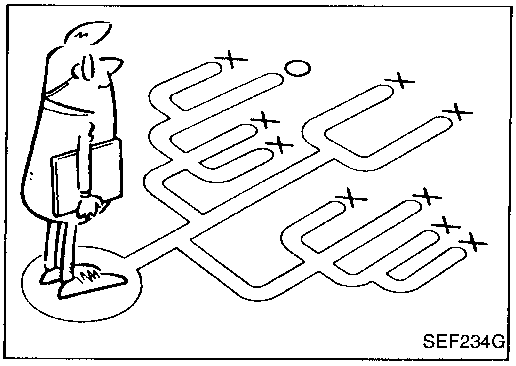
SEF234G

How to Perform Trouble Diagnoses for Quick and Accurate Repair

INTRODUCTION

The ABS system has an electronic control unit to control major functions. The control unit accepts input signals from sensors and instantly drives the actuators. It is essential that both kinds of signals are proper and stable. It is also important to check for conventional problems: such as air leaks in booster lines, lack of brake fluid, or other problems with the brake system.

It is much more difficult to diagnose a problem that occurs intermittently rather than continuously. Most intermittent problems are caused by poor electric connections or faulty wiring. In this case, careful checking of suspicious circuits may help prevent the replacement of good parts.

A visual check only may not find the cause of the problems, so a road test should be performed.

Before undertaking actual checks, take just a few minutes to talk with a customer who approaches with a ABS complaint. The customer is a very good source of information on such problems; especially intermittent ones. Through the talks with the customer, find out what symptoms are present and under what conditions they occur.

Start your diagnosis by looking for "conventional" problems first. This is one of the best ways to troubleshoot brake problems on an ABS controlled vehicle.

Preliminary Check

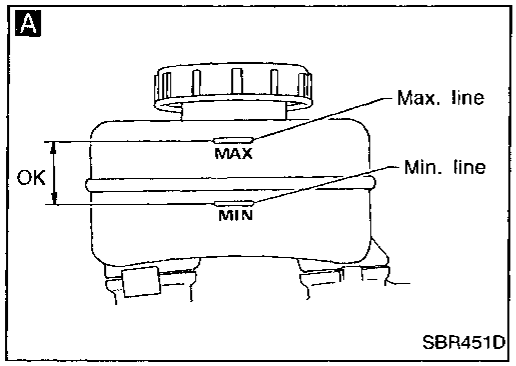

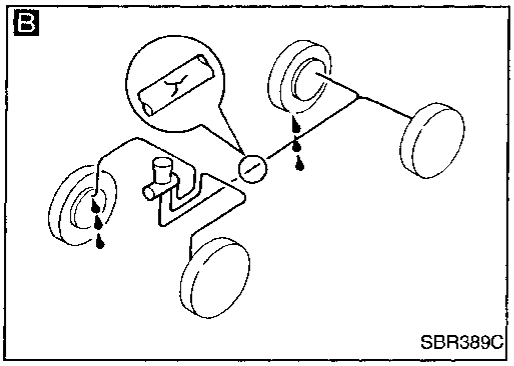

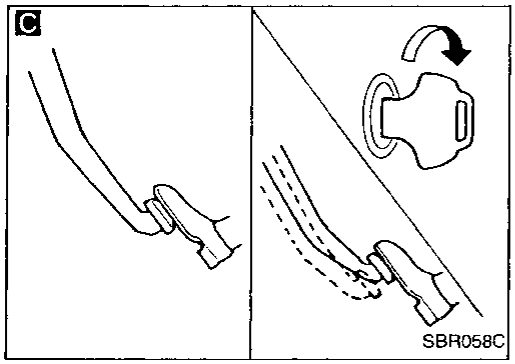

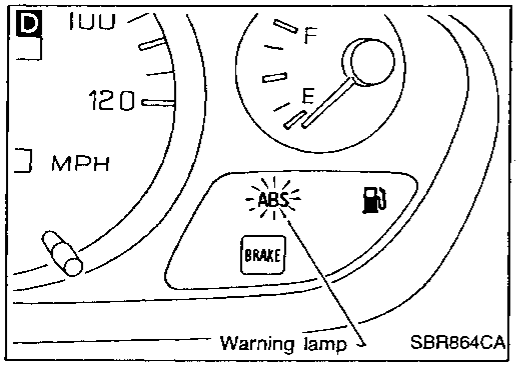

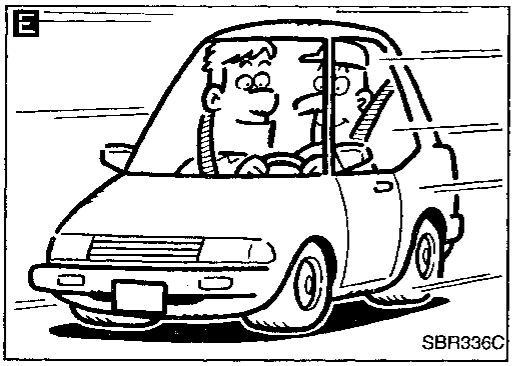

A

Check brake fluid level in reservoir tank.

Low fluid level may indicate brake pad wear or leakage from brake line.

B

Check brake line for leakage. — NG → Repair. — OK

C

Check brake booster for operation and air tightness. — NG → Replace. — OK

Check brake pads and rotor. — NG → Replace. — OK

A

Check brake fluid level in reservoir tank. — NG → Fill up brake fluid. — OK

D

Check warning lamp activation.
When ignition switch is turned on, warning lamp turns on. — NG → Check fuse, warning lamp bulb and warning lamp circuit. — OK

Check warning lamp for deactivation.
When ignition switch is turned on, warning lamp turns on, then deactivates 1 second after engine is started. — NG → Go to Self-diagnosis, BR-41, BR-45. — OK

E

Drive vehicle at 30 km/h (20 MPH) for at least one minute.

Ensure warning lamp remains off while driving. — NG → Go to Self-diagnosis, BR-41, BR-45. — OK

END

Component Parts and Harness Connector Location

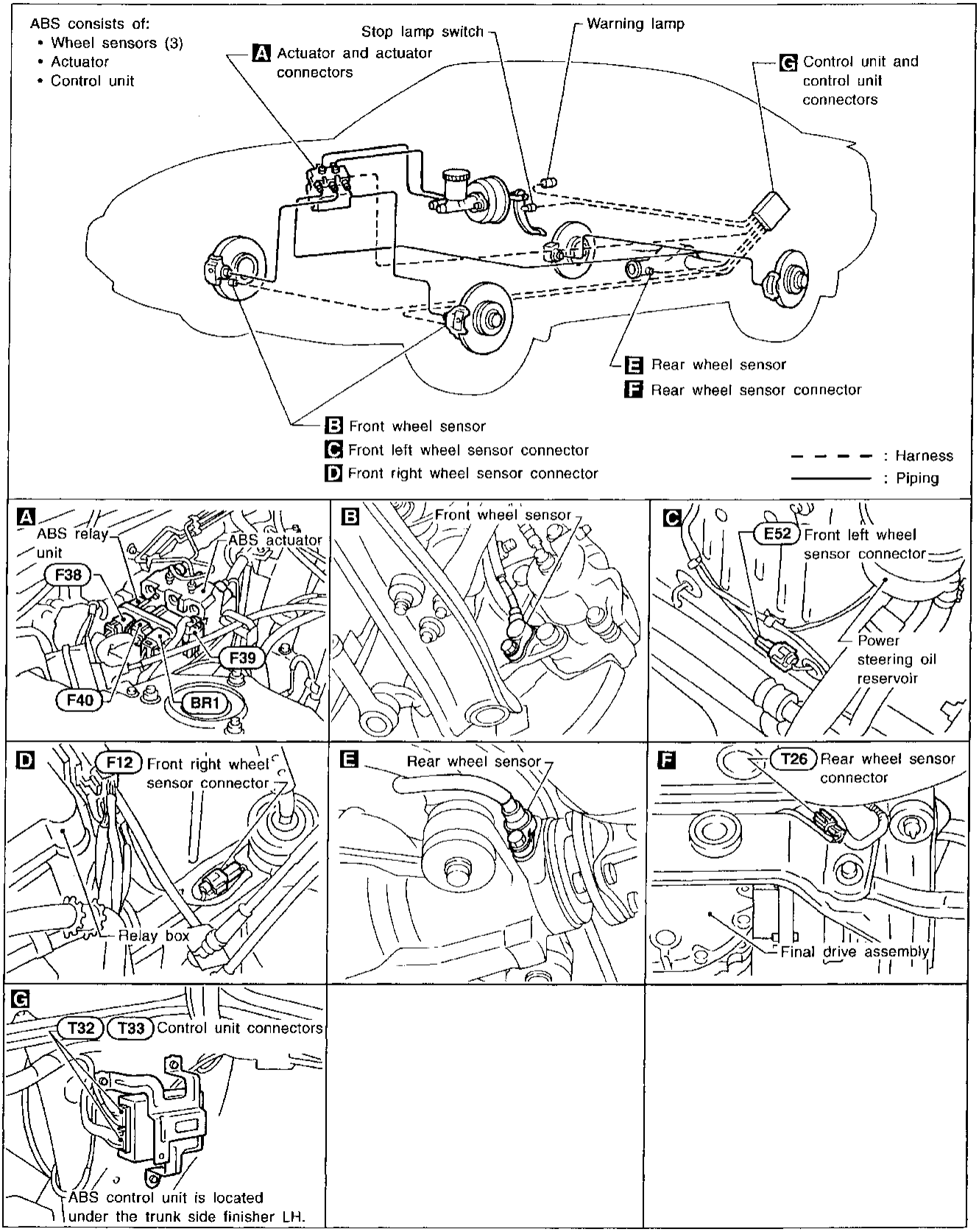

SBR571D

Circuit Diagram for Quick Pinpoint Check

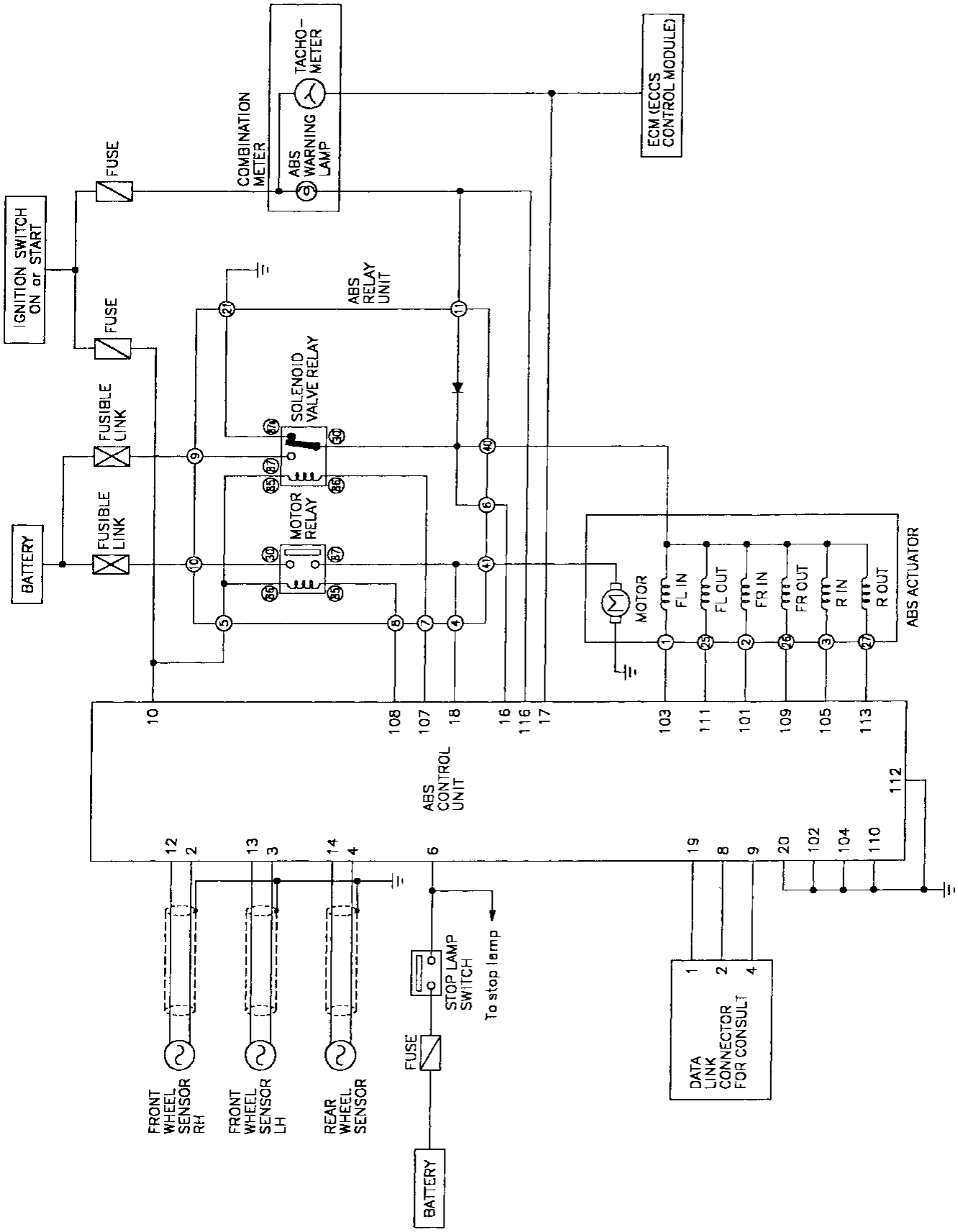

MBR214A

Wiring Diagram — ABS —

BR-ABS-01

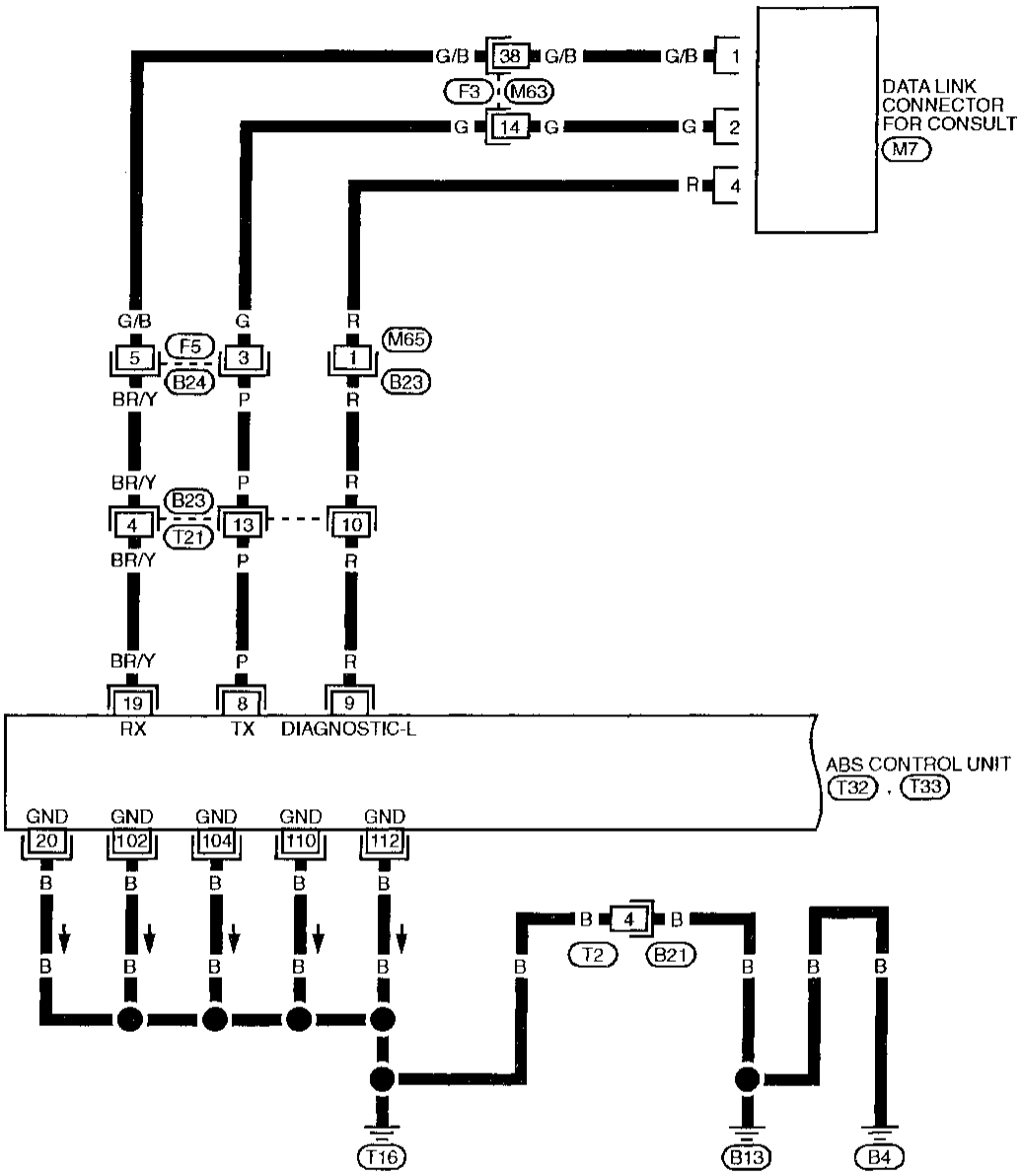

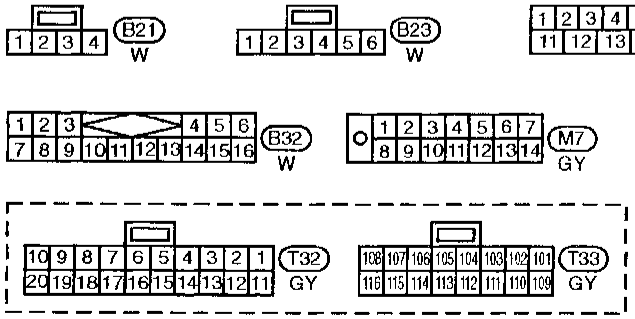

Refer to last page (Foldout page).
M63 , F3

Wiring Diagram — ABS — (Cont'd)

BR-ABS-02

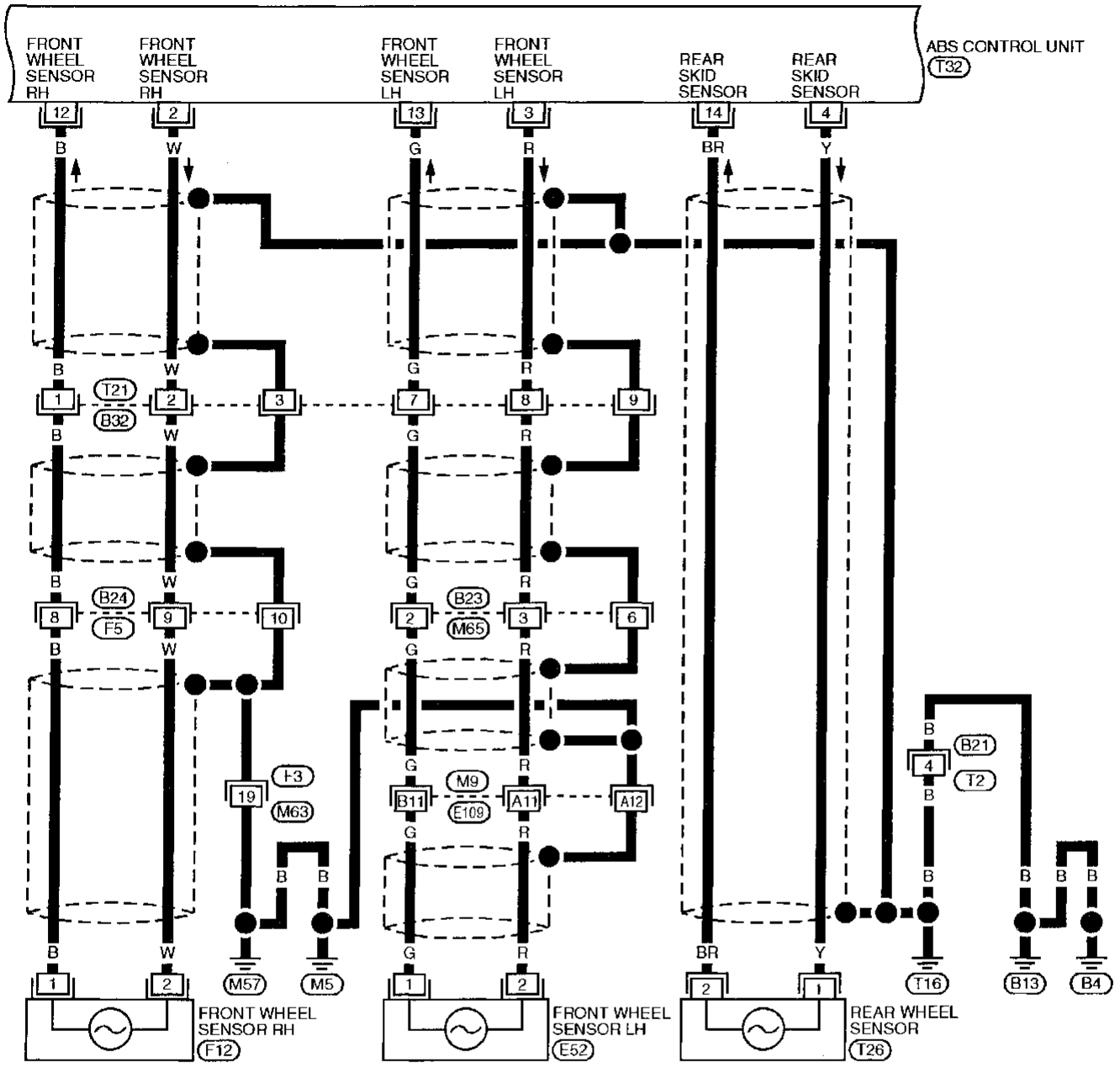

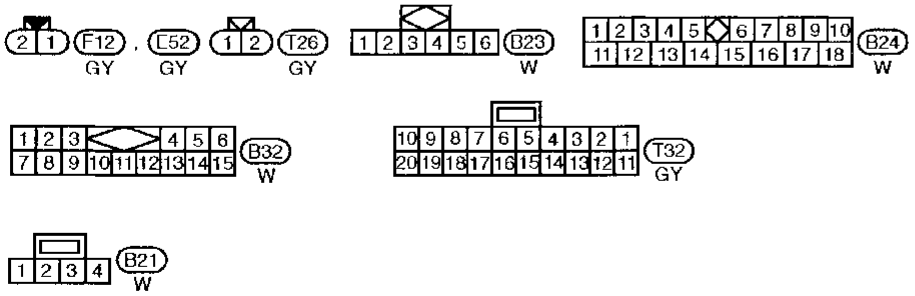

Refer to last page (Foldout page).
M9 , E109
M63 , F3

Wiring Diagram — ABS — (Cont'd)

BR-ABS-03

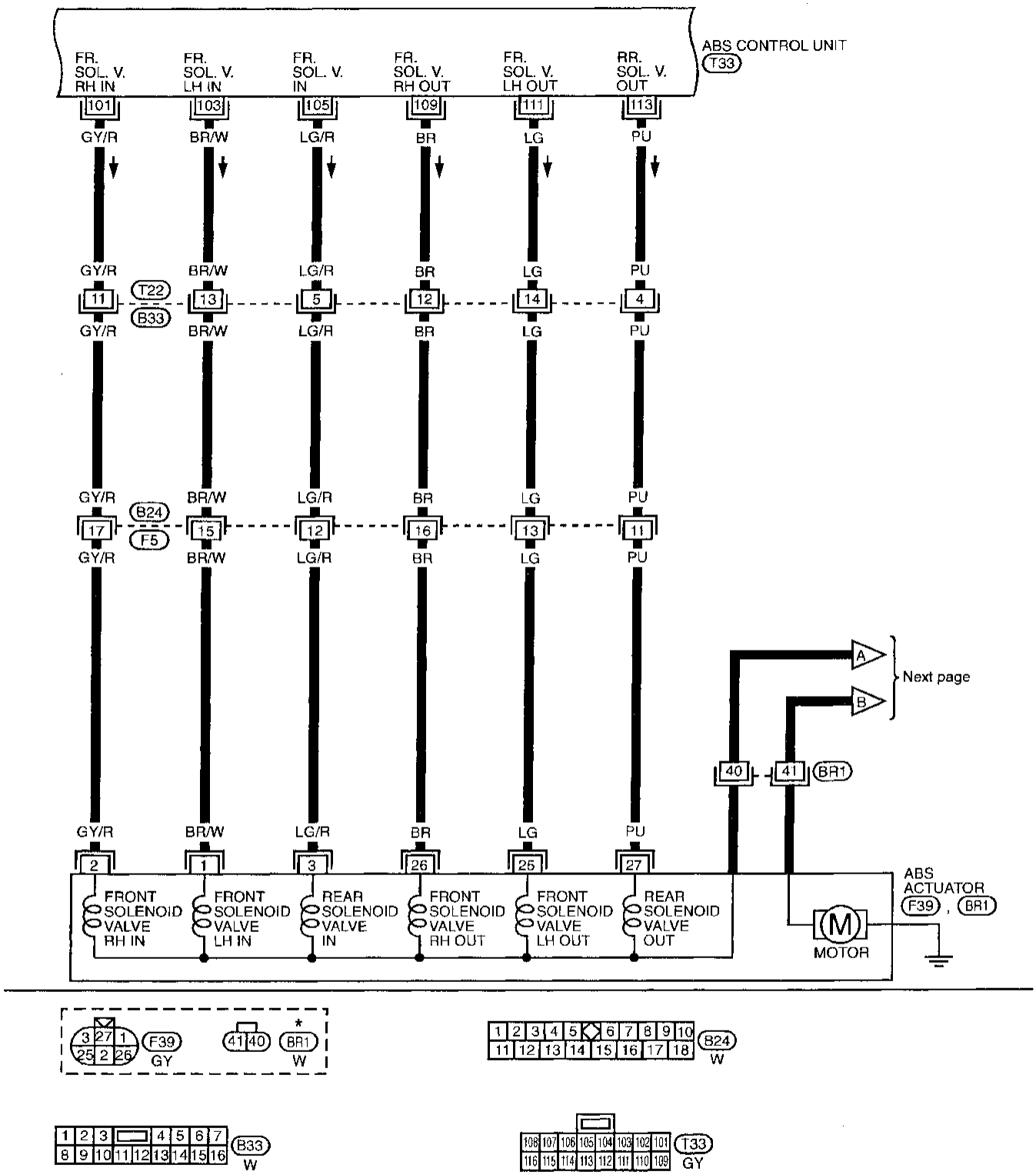

★ : This connector is not shown in "HARNESS LAYOUT" of EL section.

Wiring Diagram — ABS — (Cont'd)

BR-ABS-04

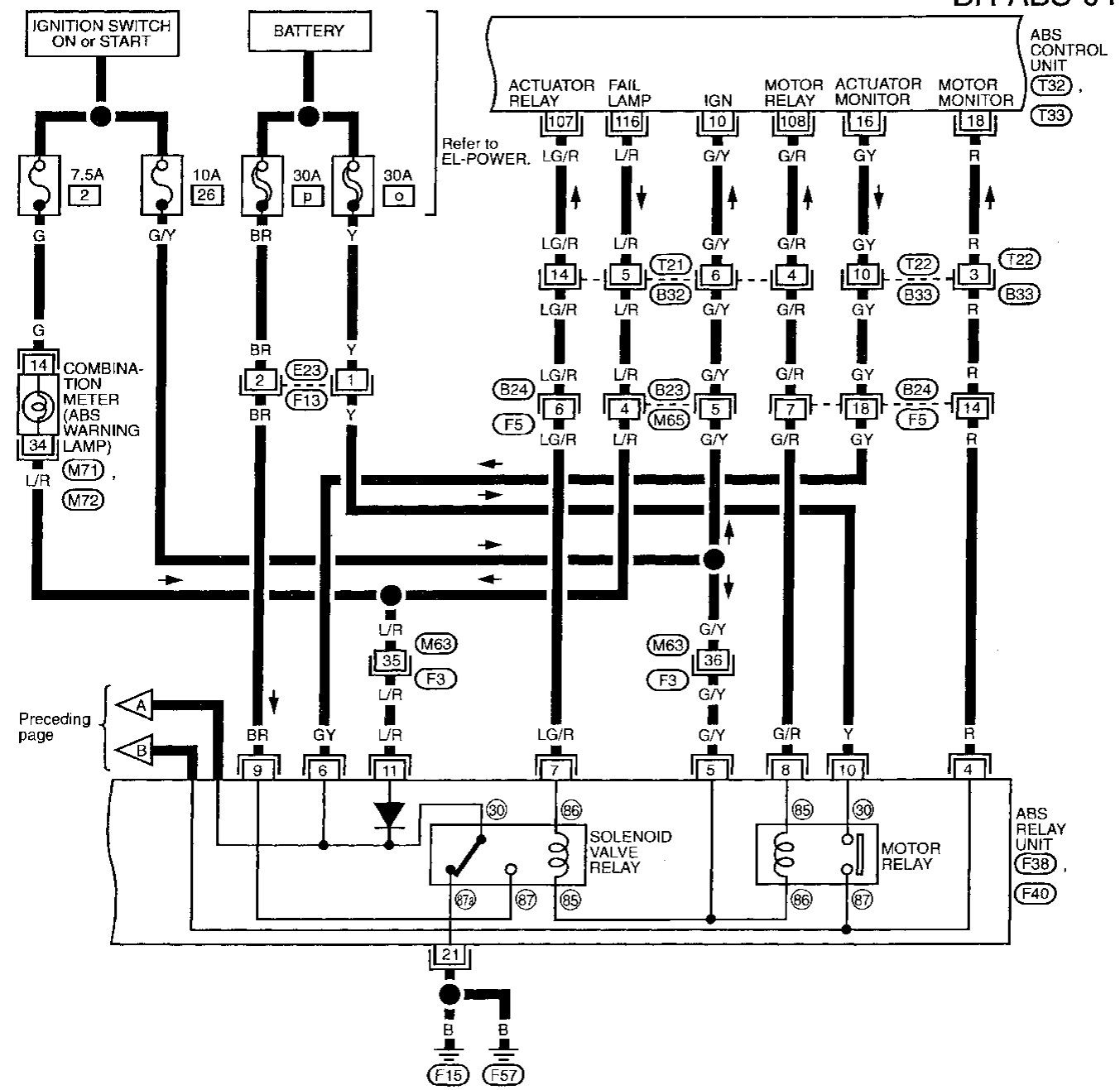

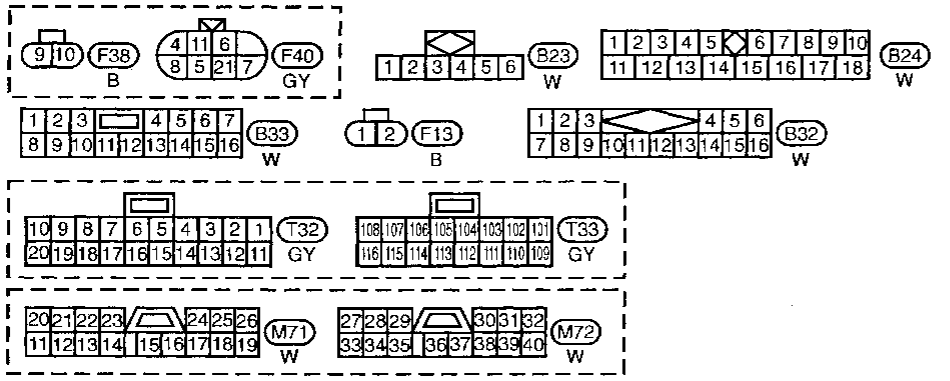

Refer to last page (Foldout page).
M63 , F3

Wiring Diagram — ABS — (Cont'd)

BR-ABS-05

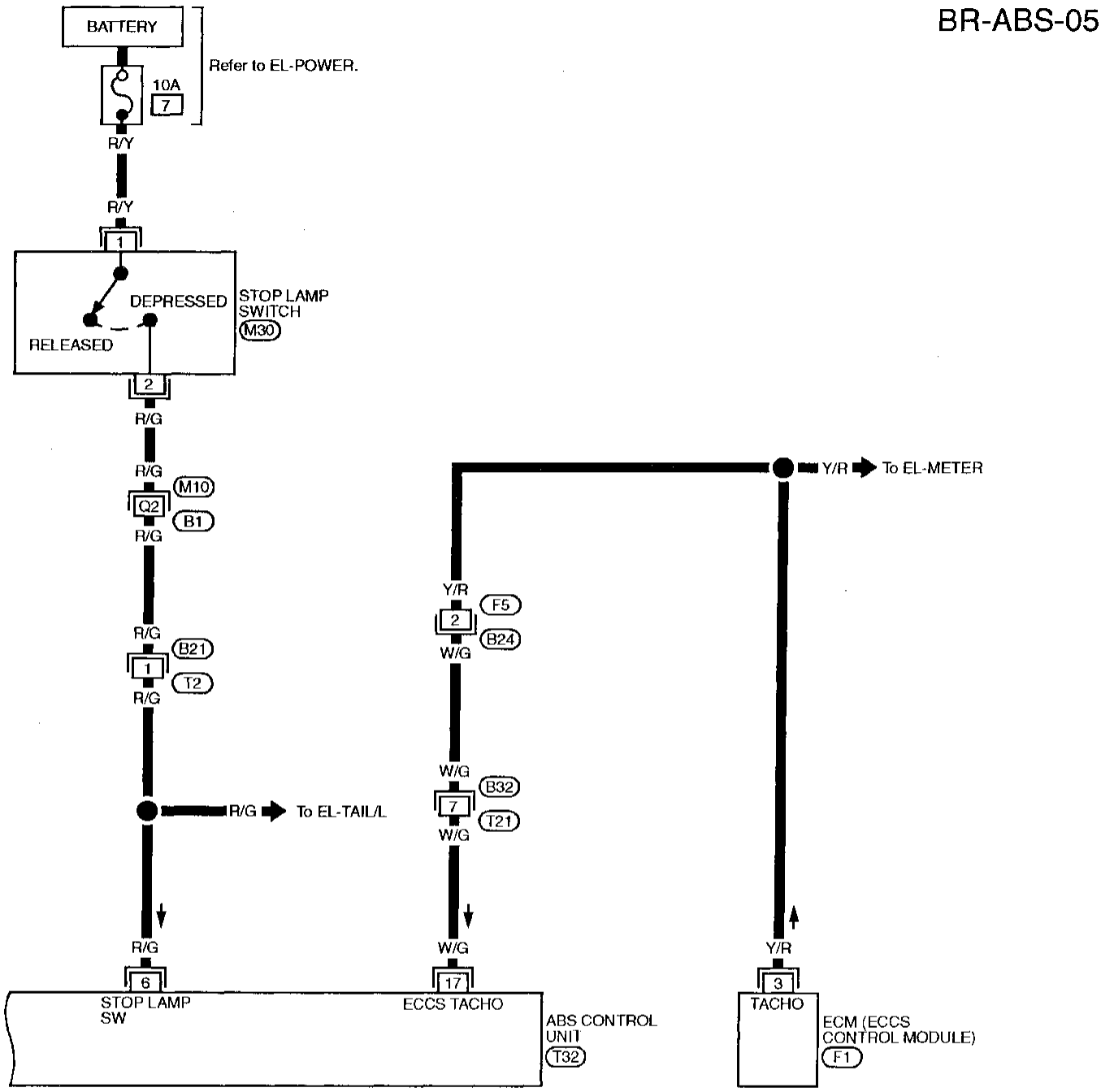

Refer to last page (Foldout page).
M10 , B1
F1

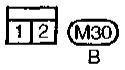

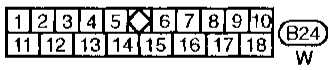

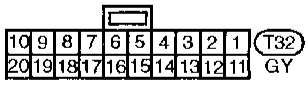

Self-diagnosis

FUNCTION

- When a problem occurs in the ABS, the warning lamp on the instrument panel comes on. To start the self-diagnostic results mode, ground the self-diagnostic (check) terminal located on "Data Link Connector for CONSULT". The location of the malfunction is indicated by the warning lamp flashing.

SELF-DIAGNOSIS PROCEDURE

Drive vehicle over 30 km/h (20 MPH) for at least one minute.

↓

Turn ignition switch "OFF".

↓

A

Ground terminal "L" of "DATA LINK CONNECTOR for CONSULT" with a suitable harness.

↓

Turn ignition switch "ON" while grounding terminal "L".
Do not depress brake pedal.

↓

B

After 3.0 seconds, the warning lamp starts flashing to indicate the malfunction code No. (See NOTE.)

↓

Verify the location of the malfunction with the malfunction code chart. Refer to BR-42. Then make the necessary repairs following the diagnostic procedures.

↓

After the malfunctions are repaired, erase the malfunction codes stored in the control unit. Refer to BR-42.

↓

Rerun the self-diagnostic results mode to verify that the malfunction codes have been erased.

↓

C

Disconnect the check terminal from the ground. The self-diagnostic results mode is now complete.

↓

Ⓐ

NOTE: The indication terminates after five minutes. However, when the ignition switch is turned from "OFF" to "ON", the indication starts flashing again.

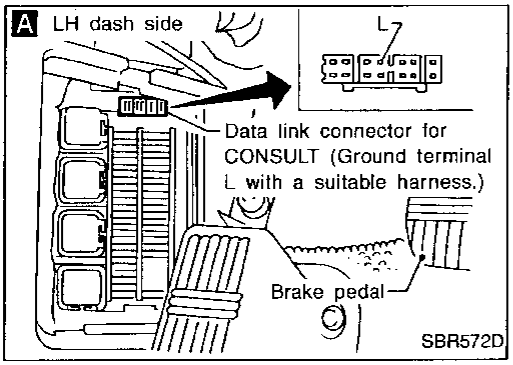

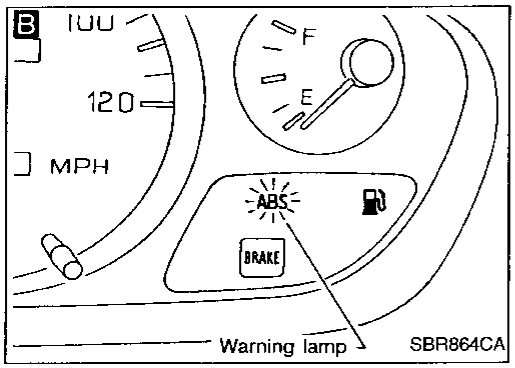

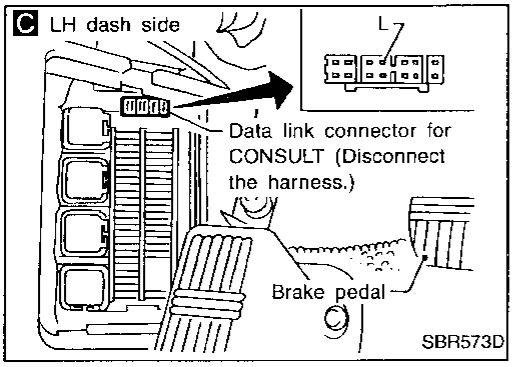

Self-diagnosis (Cont'd)

Ⓐ

↓

Check warning lamp for deactivation after driving vehicle over 30 km/h (20 MPH) for at least one minute.

↓

After making certain that warning lamp does not come on, test the ABS in a safe area to verify that it functions properly.

HOW TO READ SELF-DIAGNOSTIC RESULTS (Malfunction codes)

- Determine the code No. by counting the number of times the warning lamp flashes on and off.
- When several malfunctions occur at one time, up to three code numbers can be stored; the latest malfunction will be indicated first.
- The indication begins with the start code 12. After that a maximum of three code numbers appear in the order of the latest one first. The indication then returns to the start code 12 to repeat (the indication will stay on for five minutes at the most).
- The malfunction code chart is given on the next page.

Example: Code No. 32 REAR SENSOR SHORT-CIRCUIT

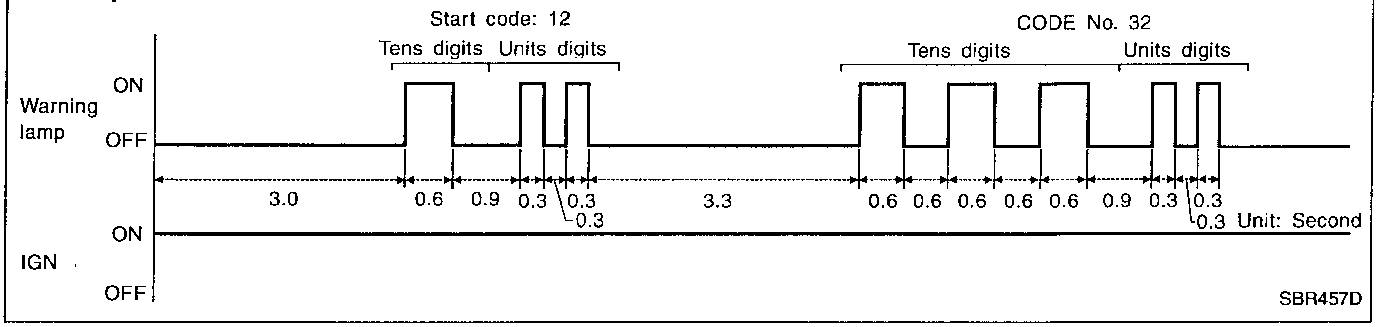

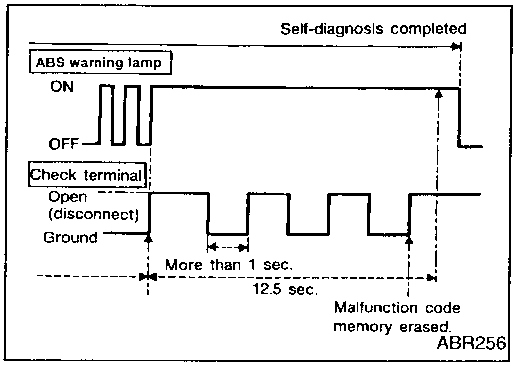

HOW TO ERASE SELF-DIAGNOSTIC RESULTS (Malfunction codes)

a. Under the self-diagnostic results mode, the malfunction memory erase mode starts when the check terminal is disconnected from the ground.

b. The self-diagnostic results (malfunction codes) can be erased by grounding the check terminal more than three times in succession within 12.5 seconds after the erase mode starts. (Each grounding must be longer than one second.)
The ABS warning lamp stays on while the self-diagnosis is in the erase mode, and goes out after the erase operation has been completed.

c. The self-diagnosis is also completed at the same time. (Refer to BR-41.)

After the erase operation is completed, it is necessary to rerun the self-diagnostic mode to verify that malfunction codes no longer appear. Only the start code (12) should be indicated when erase operation is completed and system is functioning normally.

Self-diagnosis (Cont'd)

MALFUNCTION CODE/SYMPTOM CHART

Code No. (No. of warning lamp flashes)	Malfunctioning part	Diagnostic procedure
12	Self-diagnosis could not detect any malfunctions	—
21	Front right sensor (open-circuit)	1
22	Front right sensor (short-circuit)	1
25	Front left sensor (open-circuit)	1
26	Front left sensor (short-circuit)	1
31	Rear sensor (open-circuit)	1
32	Rear sensor (short-circuit)	1
41	Actuator front right outlet solenoid valve	2
42	Actuator front right inlet solenoid valve	2
45	Actuator front left outlet solenoid valve	2
46	Actuator front left inlet solenoid valve	2
55	Actuator rear outlet solenoid valve	2
56	Actuator rear inlet solenoid valve	2
57	Power supply (Low voltage)	5
61	Actuator motor or motor relay	4
63	Solenoid valve relay	3
71	Control unit	6
ABS works frequently	—	7
Unexpected pedal action	—	8
Long stopping distance	—	9
ABS does not work	—	10
Pedal vibration and noise	—	11
Warning lamp does not come on when engine is running	Fuse, warning lamp bulb or warning lamp circuit Control unit	12
Warning lamp stays on when engine is running	Control unit power supply circuit Warning lamp bulb circuit Control unit or control unit connector Solenoid valve relay stuck Power supply for solenoid valve relay coil	13

CONSULT

CONSULT APPLICATION TO ABS

ITEM	SELF-DIAGNOSTIC RESULTS	DATA MONITOR	ACTIVE TEST
Front right wheel sensor	X	X	—
Front left wheel sensor	X	X	—
Rear wheel sensor	X	X	—
Stop lamp switch	—	X	—
Engine speed signal	—	X	—
Battery voltage	X	X	—
Front right inlet solenoid valve	X	X	X
Front right outlet solenoid valve	X	X	X
Front left inlet solenoid valve	X	X	X
Front left outlet solenoid valve	X	X	X
Rear inlet solenoid valve	X	X	X
Rear outlet solenoid valve	X	X	X
Actuator solenoid valve relay	X	X	—
Actuator motor relay (ABS MOTOR is shown on the ACTIVE TEST screen.)	X	X	X
ABS warning lamp	—	X	—
Control unit	X	—	—
ABS motor	X	—	X

X: Applicable
—: Not applicable

ECU (ABS control unit) part number mode

Ignore the ECU part number displayed in the ECU PART NUMBER MODE. Refer to parts catalog to order the ECU.

CONSULT Inspection Procedure

SELF-DIAGNOSIS PROCEDURE

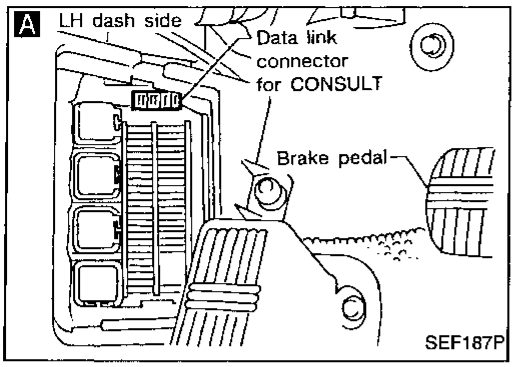

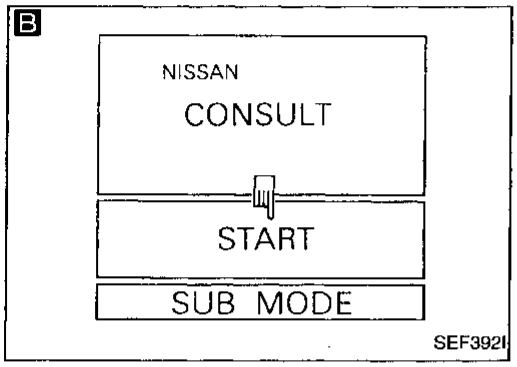

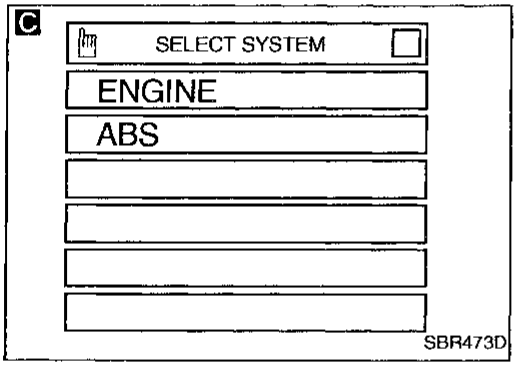

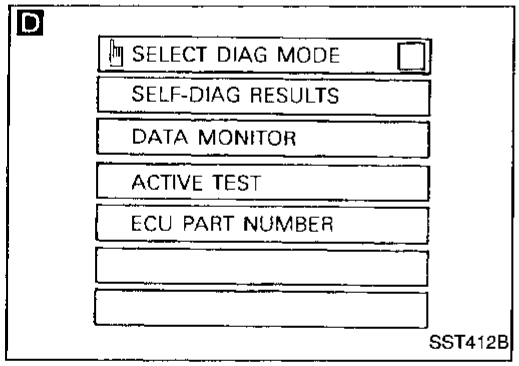

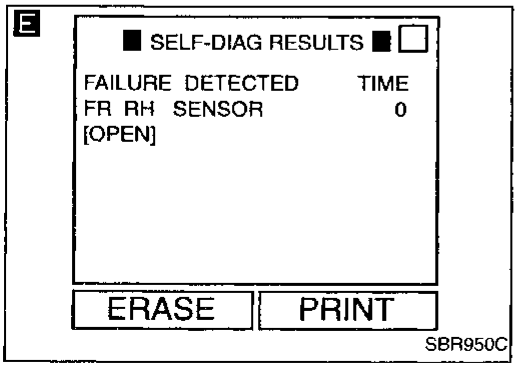

A

1) Turn ignition switch OFF.
2) Connect CONSULT to Data Link Connector for CONSULT.

↓

1) Start engine.
2) Drive vehicle over 30 km/h (20 MPH) for at least one minute.

↓

B 1) Stop vehicle with engine running and touch "START" on CONSULT screen.
C 2) Touch "ABS".
D **E** 3) Touch "SELF-DIAG RESULTS".
- **The screen shows maximum three malfunctions.**
- **Does the screen show the detected malfunction?**

No → WARNING LAMP INSPECTION
Check warning lamp and the circuit and repair if necessary.

Yes ↓

MALFUNCTION REPAIR
Make the necessary repairs following the diagnostic procedures.

↓

E

After repairing the malfunctions, start engine. Then erase the self-diagnostic results stored in the control unit by touching "ERASE".
Are the self-diagnostic results erased?

No → (back to MALFUNCTION REPAIR)

Yes ↓

Check warning lamp for deactivation after driving vehicle over 30 km/h (20 MPH) for at least one minute.
Does the warning lamp activate?

Yes → Go to **B** above.

No ↓

End

Note: "SELF-DIAG RESULTS" screen shows the detected malfunction and the times of ignition switch ON and OFF after it occurred.

SELF-DIAGNOSTIC RESULTS MODE

Diagnostic item	Diagnostic item is detected when ...	Diagnostic procedure
FR RH SENSOR [OPEN]	• Circuit for front right wheel sensor is open. (An abnormally high input voltage is entered.)	1
FR LH SENSOR [OPEN]	• Circuit for front left wheel sensor is open. (An abnormally high input voltage is entered.)	1
REAR SENSOR [OPEN]	• Circuit for rear sensor is open. (An abnormally high input voltage is entered.)	1
FR RH SENSOR [SHORT]	• Circuit for front right wheel sensor is shorted. (An abnormally low input voltage is entered.)	1
FR LH SENSOR [SHORT]	• Circuit for front left wheel sensor is shorted. (An abnormally low input voltage is entered.)	1
REAR SENSOR [SHORT]	• Circuit for rear sensor is shorted. (An abnormally low input voltage is entered.)	1
FR RH IN ABS SOL [OPEN]	• Circuit for front right inlet solenoid valve is open. (An abnormally low output voltage is entered.)	2
FR LH IN ABS SOL [OPEN]	• Circuit for front left inlet solenoid valve is open. (An abnormally low output voltage is entered.)	2
RR IN ABS SOL [OPEN]	• Circuit for rear inlet solenoid valve is open. (An abnormally low output voltage is entered.)	2
FR RH IN ABS SOL [SHORT]	• Circuit for front right inlet solenoid valve is shorted. (An abnormally high output voltage is entered.)	2
FR LH IN ABS SOL [SHORT]	• Circuit for front left inlet solenoid valve is shorted. (An abnormally high output voltage is entered.)	2
RR IN ABS SOL [SHORT]	• Circuit for rear inlet solenoid valve is shorted. (An abnormally high output voltage is entered.)	2
FR RH OUT ABS SOL [OPEN]	• Circuit for front right outlet solenoid valve is open. (An abnormally low output voltage is entered.)	2
FR LH OUT ABS SOL [OPEN]	• Circuit for front left outlet solenoid valve is open. (An abnormally low output voltage is entered.)	2
RR OUT ABS SOL [OPEN]	• Circuit for rear outlet solenoid valve is open. (An abnormally low output voltage is entered.)	2
FR RH OUT ABS SOL [SHORT]	• Circuit for front right outlet solenoid valve is shorted. (An abnormally high output voltage is entered.)	2
FR LH OUT ABS SOL [SHORT]	• Circuit for front left outlet solenoid valve is shorted. (An abnormally high output voltage is entered.)	2
RR OUT ABS SOL [SHORT]	• Circuit for rear outlet solenoid valve is shorted. (An abnormally high output voltage is entered.)	2
ABS ACTUATOR RELAY [ON FAILURE]	• Actuator solenoid valve relay is ON, even if control unit sends an OFF signal or relay control lead is shorted to ground.	3
ABS ACTUATOR RELAY [OFF FAILURE]	• Actuator solenoid valve relay is OFF, even if control unit sends an ON signal or relay control lead is open.	3
ABS MOTOR [ON FAILURE]	• Actuator motor is running, even if control unit sends an OFF signal or relay control lead is shorted to ground.	4
ABS MOTOR [OFF FAILURE]	• Actuator motor is not running, even if control unit sends an ON signal or relay control lead is open.	4
BATTERY VOLT [VB-HIGH]	• Power source voltage supplied to ABS control unit is abnormally high.	5
BATTERY VOLT [VB-LOW]	• Power source voltage supplied to ABS control unit is abnormally low.	5
CONTROL UNIT	• Function of calculation in ABS control unit has failed.	6
ABS MOTOR [ABNORMAL WHEEL LOCKING]	• ABS motor speed is abnormally low.	4

CAUTION:
When ABS warning lamp illuminates and no malfunction is detected in self-diagnostic results, check engine revolution signal circuit.

CONSULT Inspection Procedure (Cont'd)

DATA MONITOR PROCEDURE

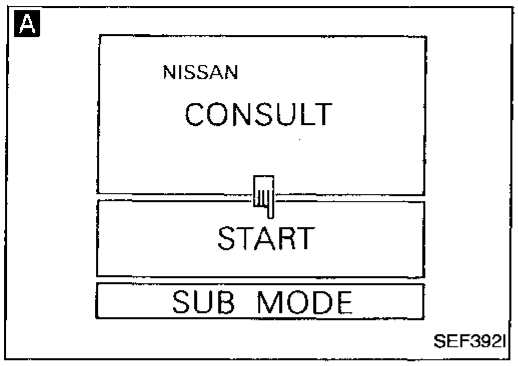

1) Turn ignition switch OFF.
2) Connect CONSULT to Data Link Connector for CONSULT.
3) Turn ignition switch ON.

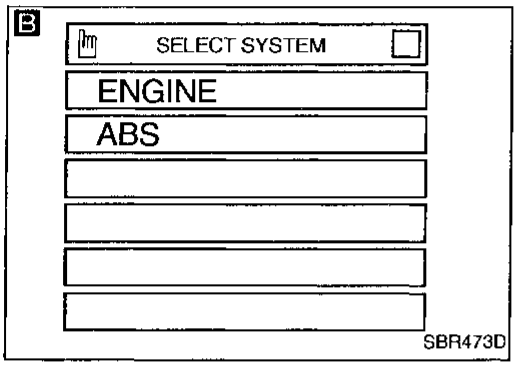

A 1) Touch "START" on CONSULT screen.
B 2) Touch "ABS".
C 3) Touch "DATA MONITOR".

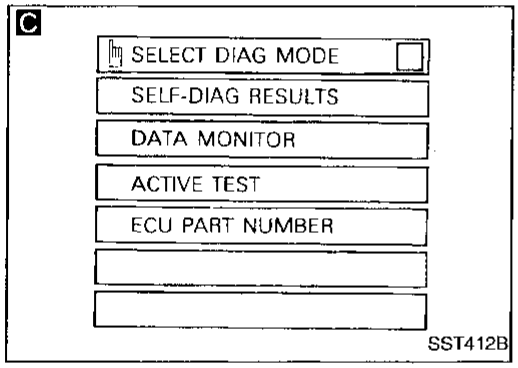

D 1) Touch "SETTING" on "SELECT MONITOR ITEM" screen.
E 2) Touch "LONG TIME" on "SET RECORDING COND" screen.
D 3) Touch "START" on "SELECT MONITOR ITEM".

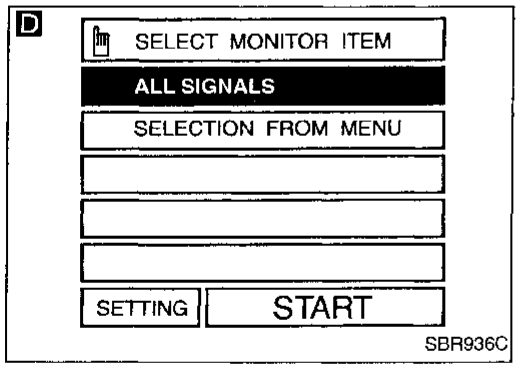

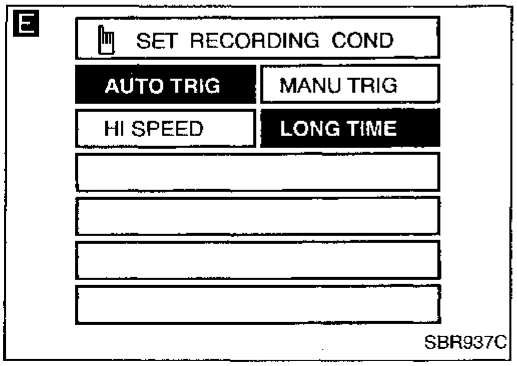

CONSULT Inspection Procedure (Cont'd)

ACTIVE TEST PROCEDURE

- When conducting Active test, vehicle must be stationary.
- When ABS warning lamp stays on, never conduct Active test.

1) Turn ignition switch OFF.
2) Connect CONSULT to Data Link Connector for CONSULT.
3) Start engine.

↓

A 1) Touch "START" on CONSULT screen.
B 2) Touch "ABS".
C 3) Touch "ACTIVE TEST".

↓

D 1) Select active test item by touching screen.
E 2) Touch "START".

↓

Carry out the active test by touching screen key.

A

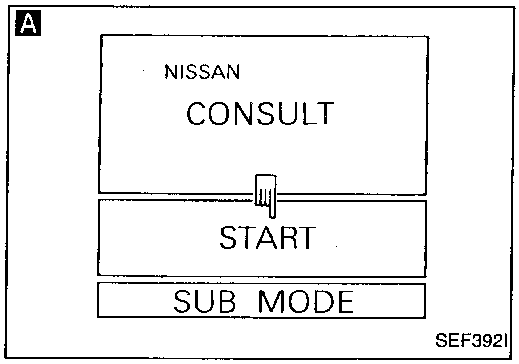

B

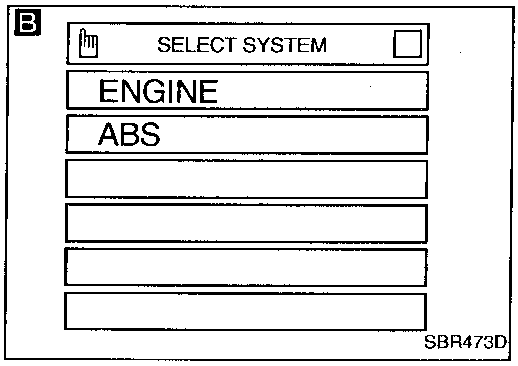

C

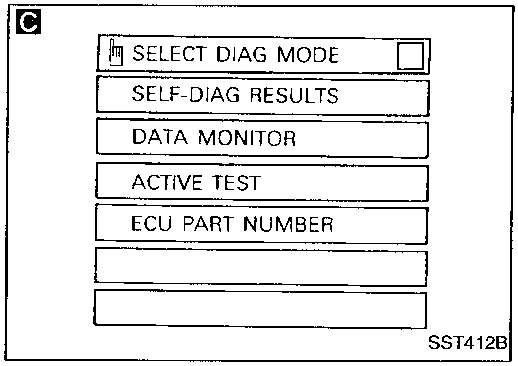

D

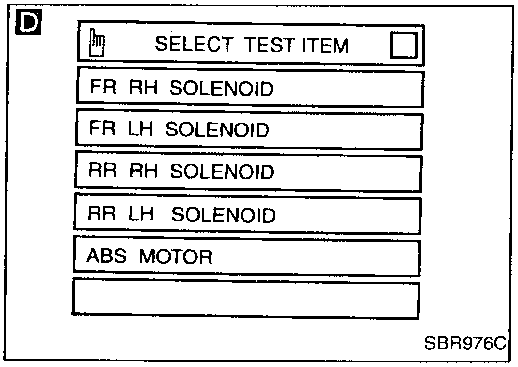

E

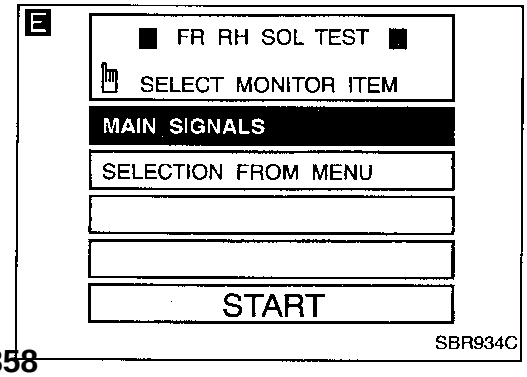

DATA MONITOR MODE

MONITOR ITEM	CONDITION	SPECIFICATION
FR RH SENSOR FR LH SENSOR REAR SENSOR	Drive vehicle. (Each wheel is rotating.)	Displays computed vehicle speed from wheel sensor signal. Almost the same speed as speedometer.
STOP LAMP SW	Turn ignition switch ON and depress brake pedal.	Depress the pedal: ON Release the pedal: OFF
ENG RPM SIGNAL	Engine is running.	Engine stops: STOP Engine is running: RUN
FR RH IN SOL FR RH OUT SOL FR LH IN SOL FR LH OUT SOL REAR IN SOL REAR OUT SOL	Ignition switch is turned ON or engine is running.	Operating conditions for each solenoid valve are indicated. ABS is not operating: OFF
ACTUATOR RLY	Ignition switch is turned ON or engine is running.	Displays ON/OFF condition of ABS actuator relay. When turning ignition switch ON, ABS actuator relay is operated.
MOTOR RELAY		ABS is not operating: OFF ABS is operating: ON
WARNING LAMP		Warning lamp is turned on: ON Warning lamp is turned off: OFF
BATTERY VOLT		Power supply voltage for control unit

ACTIVE TEST MODE

TEST ITEM	CONDITION	JUDGEMENT		
FR RH SOLENOID FR LH SOLENOID FRONT SOLENOID REAR SOLENOID	Engine is running.	Brake fluid pressure control operation		
			IN SOL	OUT SOL
		UP (Increase):	OFF	OFF
		KEEP (Hold):	ON	OFF
		DOWN (Decrease):	ON	ON
ABS MOTOR		ABS actuator motor ON: Motor runs OFF: Motor stops		

Note: Active test will automatically stop ten seconds after the test starts. (EMERGENCY STOP monitor shows ON.)

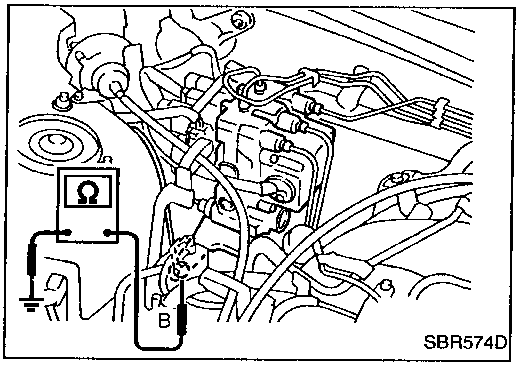

Ground Circuit Check

ACTUATOR MOTOR GROUND

- Check resistance between actuator motor earth terminal and body ground.
  Resistance: approximately 0Ω

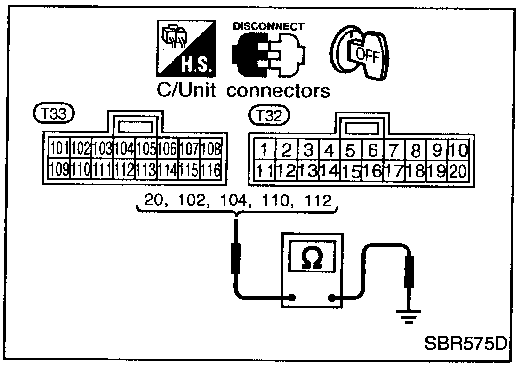

CONTROL UNIT GROUND

- Check resistance between control unit connector terminals and ground.
  Resistance: approximately 0Ω

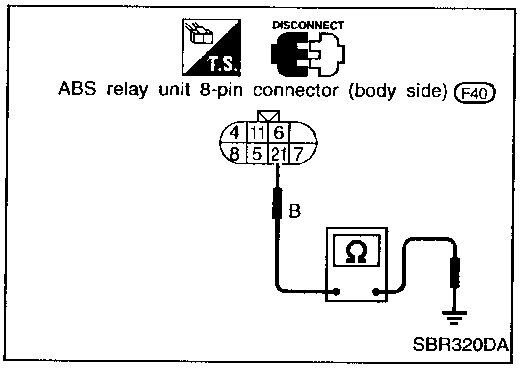

ACTUATOR GROUND

- Check resistance between ABS relay unit harness 8-pin connector (body side) terminal ㉑ and ground.
  Resistance: approximately 0Ω

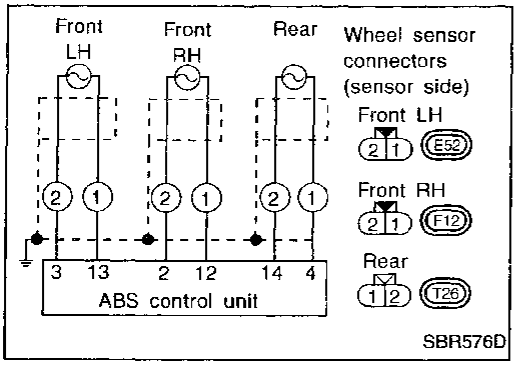

Diagnostic Procedure 1 (Wheel sensor or rotor)

Malfunction code No. 21, 22, 25, 26, 31, 32

1. Disconnect connectors from control unit and wheel sensor of malfunction code No. Check terminals for damage or loose connections. Then reconnect connectors.
2. Carry out self-diagnosis again.
   Does warning lamp activate again?

No → Inspection end

Yes ↓

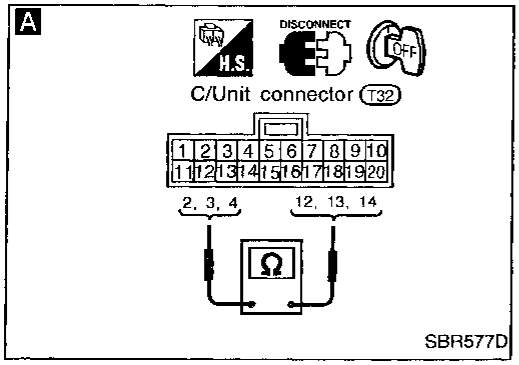

A

WHEEL SENSOR ELECTRICAL CHECK

1. Disconnect control unit connector.
2. Check resistance between control unit connector (T32) terminals.
   Code No. 21 or 22 (Front RH wheel)
   Terminals ② and ⑫
   Code No. 25 or 26 (Front LH wheel)
   Terminals ③ and ⑬
   Code No. 31 or 32 (Rear wheel)
   Terminals ④ and ⑭
   Resistance: 0.6 - 3.3 kΩ

OK → Ⓐ (See next page.)

NG ↓

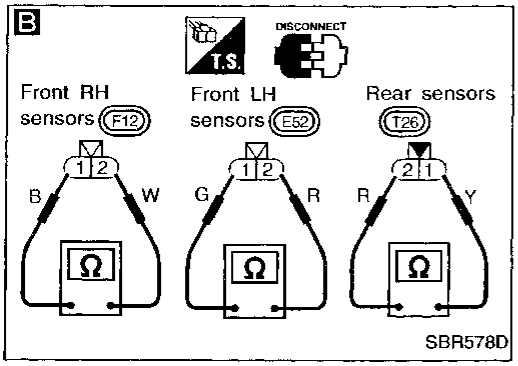

B

CHECK WHEEL SENSOR.

Check each sensor for resistance.
Resistance: 0.6 - 3.3 kΩ

OK → Check the following.
- Harness connectors (T32), (E52), (F12), (T26)
- Harness for open or short between wheel sensor connectors and control unit

If NG, repair harness or connectors.

NG ↓

Replace wheel sensor.

Diagnostic Procedure 1 (Wheel sensor or rotor) (Cont'd)

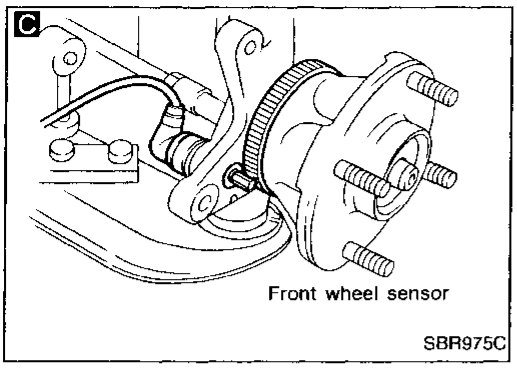

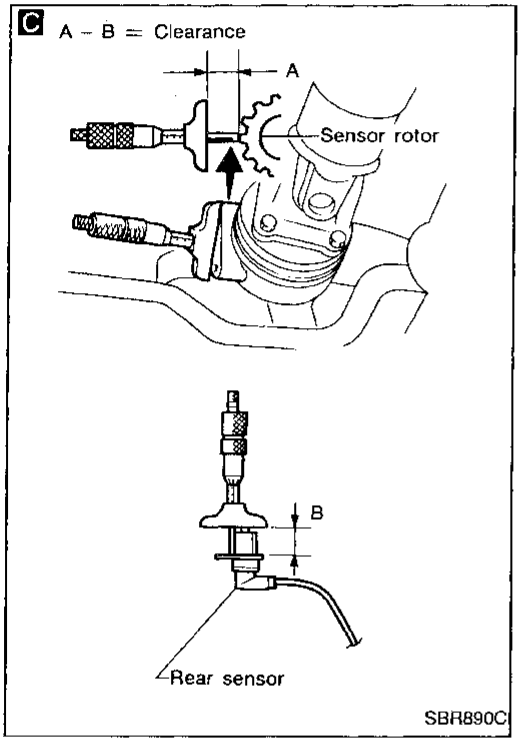

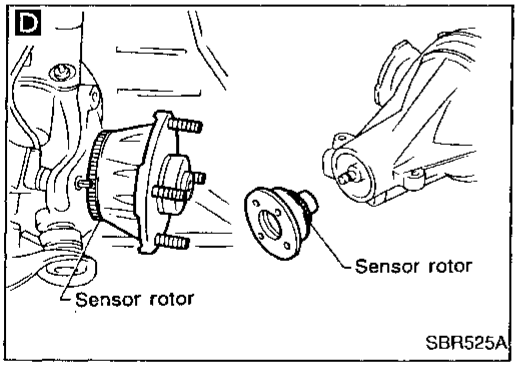

Ⓐ

C

WHEEL SENSOR MECHANICAL CHECK

Check for any foreign materials and clearance between sensor and rotor.

Clearance:

Front

Make sure the sensor is installed with minimum clearance.

Rear

0.31 - 0.82 mm
(0.0122 - 0.0323 in)

NG → Clean sensor fixing portion, reinstall or replace sensor.

OK ↓

D

Check sensor rotor for teeth damage.

NG → Replace sensor rotor.

OK ↓

Check control unit pin terminals for damage or the connection of control unit harness connector.
Reconnect control unit harness connector.
Then retest.

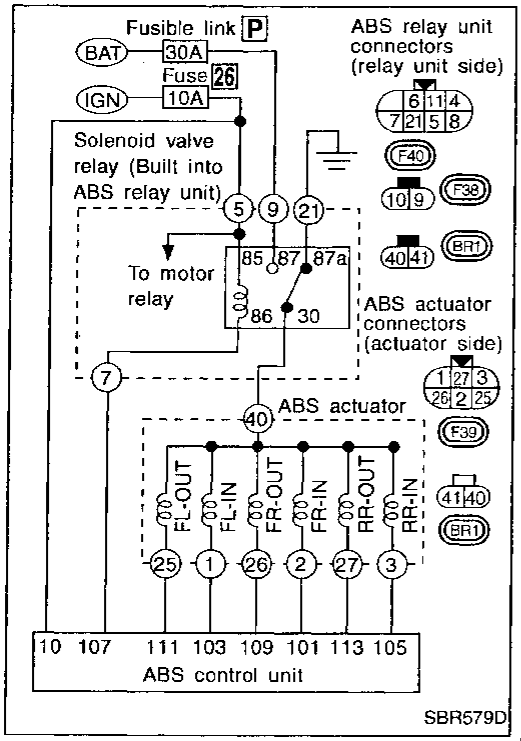

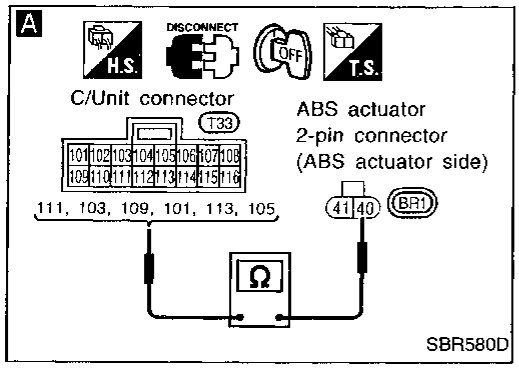

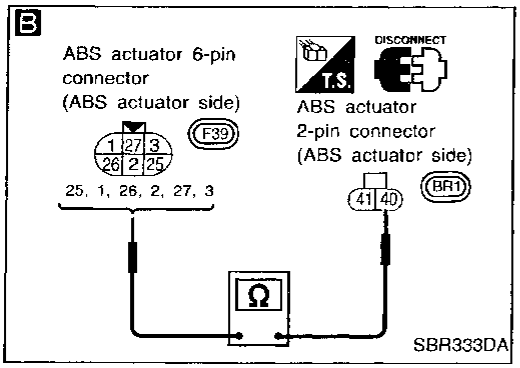

Diagnostic Procedure 2 (ABS actuator solenoid valve)

Malfunction code No. 41, 45, 55, 42, 46, 56

1. Disconnect connectors from control unit, ABS actuator and ABS relay unit. Check terminals for damage or loose connections. Then reconnect connectors.
2. Carry out self-diagnosis again.
Does warning lamp activate again?

No → Inspection end

Yes ↓

A

ABS ACTUATOR SOLENOID VALVE CHECK

1. Disconnect connectors from control unit and ABS actuator.
2. Check resistance between control unit connector terminals and ABS actuator 2-pin connector (BR1) (ABS actuator side) terminal.

Code No.	Control unit	ABS actuator	Resistance
41	109	40	3.7 - 8Ω
45	111	40	
55	113	40	
42	101	40	
46	103	40	
56	105	40	

OK → A (Go to next page.)

NG ↓

B

1. Disconnect ABS actuator 6-pin connector.
2. Check resistance between ABS actuator 6-pin connector (F39) (ABS actuator side) terminals and ABS actuator 2-pin connector (BR1) (ABS actuator side) terminal.

Code No.	ABS actuator 6-pin	ABS actuator 2-pin	Resistance
41	26	40	3.7 - 8Ω
45	25	40	
55	27	40	
42	2	40	
46	1	40	
56	3	40	

OK → Check the following.
- Harness connectors (T33), (F39), (BR1)
- Harness for open or short between ABS relay unit connector and control unit
- Harness for open or short between ABS relay unit 8-pin connector and ABS relay unit 1-pin connector

If NG, repair harness or connectors.

NG ↓

Check resistance between solenoid valve terminals 1, 25, 2, 26, 3, 27.
Resistance: 7.4 - 16Ω

OK → Check the following.
- Harness connector (F39)
- Harness for open or short between actuator connector terminals

If NG, repair harness or connectors.

NG ↓

Replace actuator.

Diagnostic Procedure 2 (ABS actuator solenoid valve) (Cont'd)

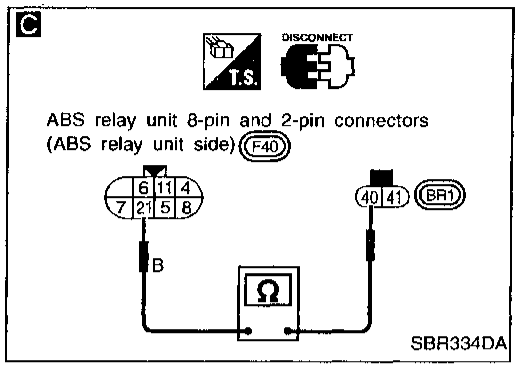

Ⓐ

C

1. Disconnect ABS relay unit connectors.
2. Check continuity between ABS relay unit 2-pin connector BR1 (ABS relay unit side) terminal ㊵ and ABS relay unit 8-pin connector F40 (ABS relay unit side) terminal ㉑.
   Continuity should exist.

OK → Go to Diagnostic Procedure 3, BR-54.

NG → Replace ABS relay unit.

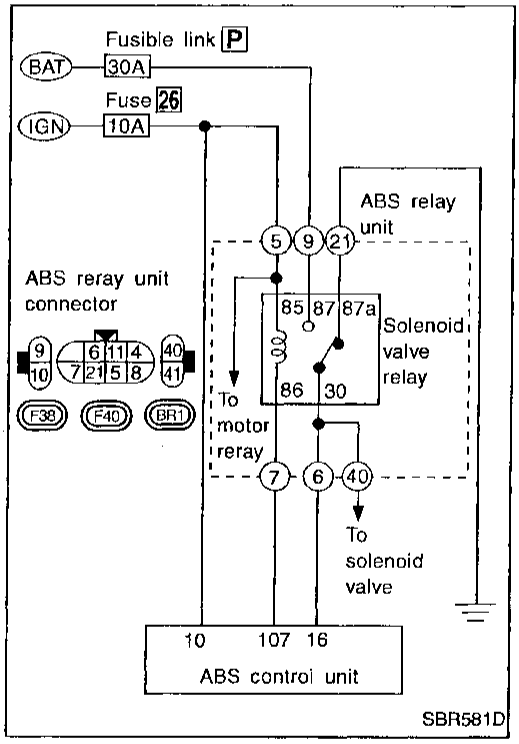

Diagnostic Procedure 3 (Solenoid valve relay)

Malfunction code No. 63

SOLENOID VALVE POWER SUPPLY CHECK

Check 30A fusible link P. For fusible link layout, refer to POWER SUPPLY ROUTING in EL section.

NG → Ⓐ (Skip page.)

OK ↓

Check 10A fuse 26. For fuse layout, refer to POWER SUPPLY ROUTING in EL section.

NG → Ⓑ (Skip page.)

OK ↓

1. Disconnect connectors from control unit and ABS actuator. Check terminals for damage or loose connection. Then reconnect connectors.
2. Carry out self-diagnosis again.
   Does warning lamp activate again?

No → Inspection end

Yes ↓

GROUND CIRCUIT CHECK

Refer to CONTROL UNIT GROUND and ACTUATOR GROUND in Ground Circuit Check, BR-50.

NG → Repair harness and connectors.

OK ↓

Ⓒ

Diagnostic Procedure 3 (Solenoid valve relay) (Cont'd)

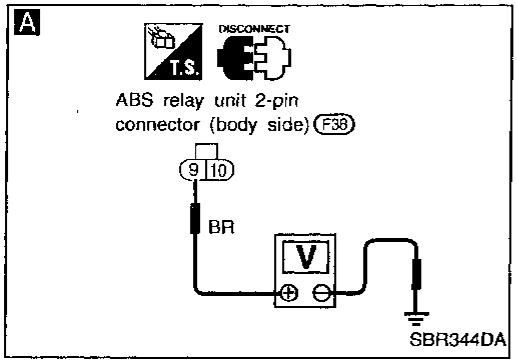

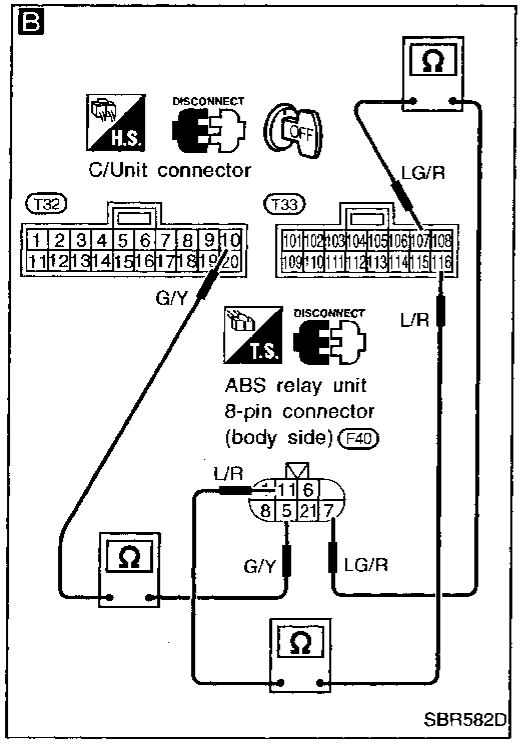

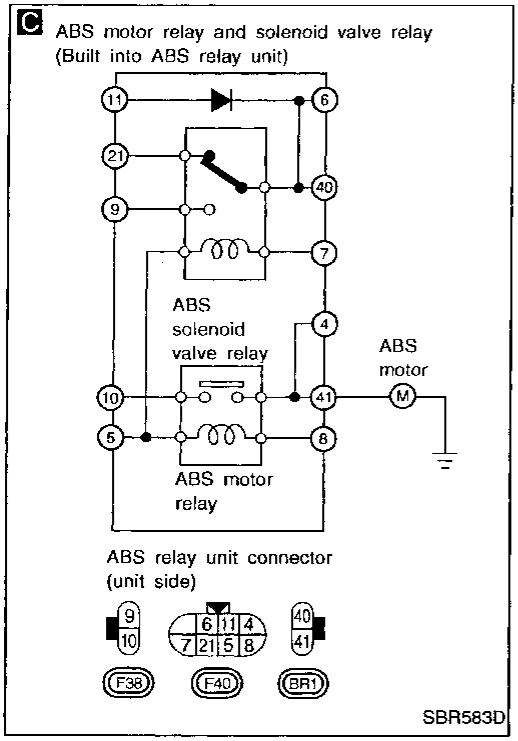

Ⓒ

A

SOLENOID VALVE POWER SUPPLY CHECK

1. Disconnect connectors from ABS relay unit.
2. Check voltage between ABS relay unit 2-pin connector (F38) (body side) terminal ⑨ and ground.

Battery voltage should exist.

NG → Check the following.
- Harness connector (F38)
- Harness for open or short between ABS relay unit and fuse

If NG, repair harness or connectors.

OK ↓

B

CIRCUIT CHECK

1. Disconnect ABS relay unit 8-pin connector (F40) and control unit connectors (T32), (T33).
2. Check continuity between control unit connector terminals and ABS relay unit 8-pin connector (F40) (body side) terminals.

Control unit	ABS relay unit
(107)	⑦
⑩	⑤
(116)	⑪

Continuity should exist.

NG → Check the following.
- Harness connector (T32), (T33), (F40)
- Harness for open or short between solenoid valve relay unit terminal (body side) and control unit

If NG, repair harness or connectors.

OK ↓

C

SOLENOID VALVE RELAY CHECK

Relay type		Solenoid valve relay
Condition		Continuity existence between terminals ㊵ or ⑥ and ㉑
Battery voltage not applied between each terminal	⑤ and ⑦	Yes
Battery voltage applied between each terminal	⑤ and ⑦	No
Check resistance between each terminal	⑤ and ⑦	Approx. 100Ω

NG → Replace ABS relay unit.

OK ↓

Go to diagnostic procedure 2, BR-53.

Diagnostic Procedure 3 (Solenoid valve relay) (Cont'd)

D

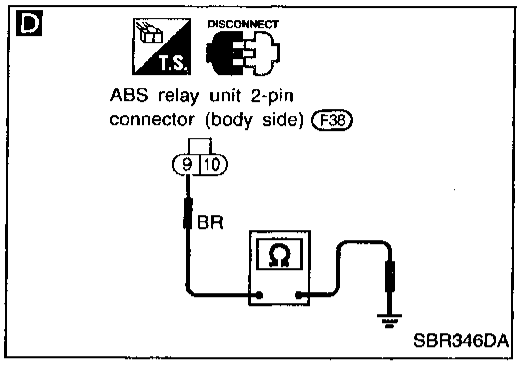

E

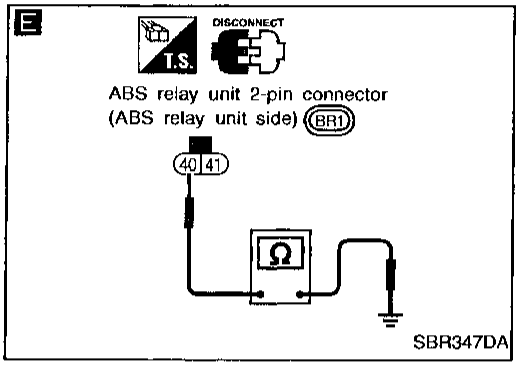

F

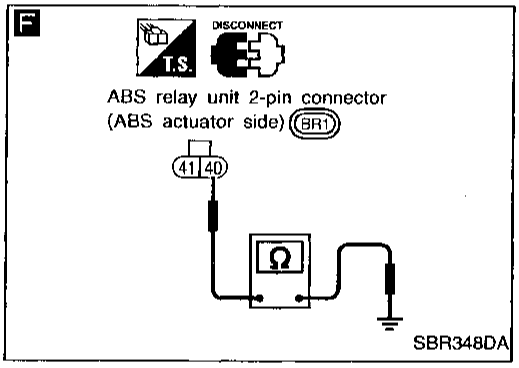

Ⓐ

Replace fusible link.
Does the fusible link blow out when ignition switch is turned "ON"?

- No → Inspection end
- Yes ↓

D

RELAY UNIT POWER SUPPLY CIRCUIT

1. Disconnect ABS relay unit 2-pin connector F38.
2. Check continuity between ABS relay unit 2-pin connector F38 (body side) terminal ⑨ and ground.
   Continuity should not exist.

- NG → Check the following.
  - Harness connector F38
  - Harness for open or short between ABS relay unit and fuse

  If NG, repair harness or connectors.
- OK ↓

E

1. Disconnect ABS relay unit connectors and control unit connector.
2. Check continuity between ABS relay unit 2-pin connector BR1 (ABS relay unit side) terminal ㊵ and ground.
   Continuity should not exist.

- NG → Replace ABS relay unit.
- OK ↓

F

Check continuity between ABS relay unit 2-pin connector BR1 (ABS actuator side) terminal ㊵ and ground.
Continuity should not exist.

- NG → Replace ABS actuator.
- OK ↓

Go to Diagnostic Procedure 2, BR-53.

Ⓑ

Replace fuse.
Does the fuse blow out when ignition switch is turned "ON"?

- Yes → Check the following.
  - Harness connector F40
  - Harness for open or short between ABS relay unit connector and fuse

  If NG, repair harness or connectors.
- No ↓

Inspection end

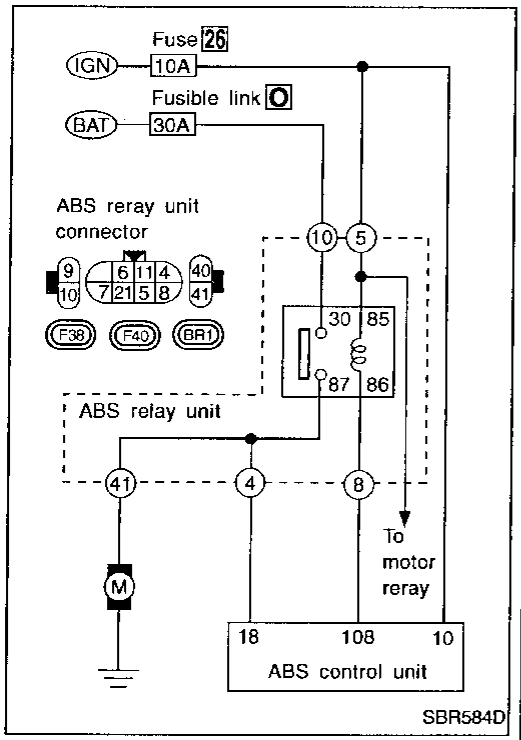

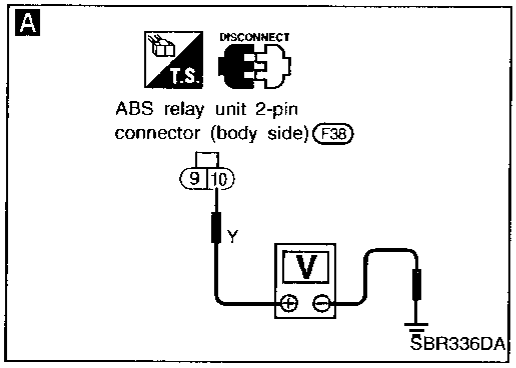

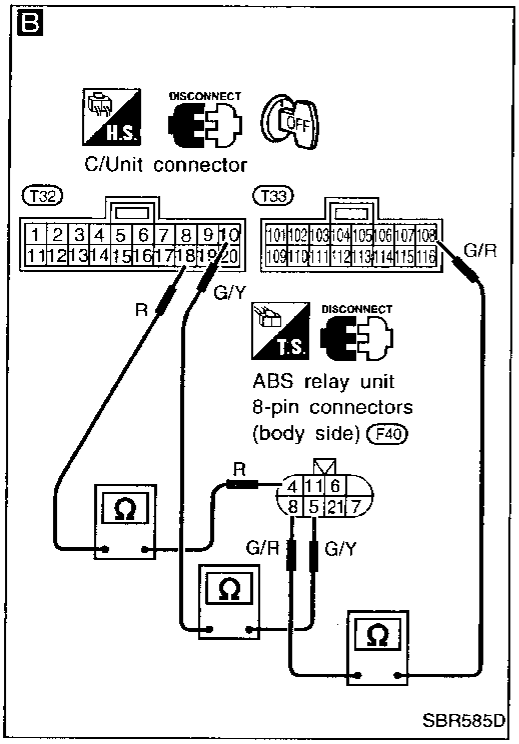

Diagnostic Procedure 4 (Motor relay or motor)

Malfunction code No. 61

MOTOR POWER SUPPLY CIRCUIT

Check 30A fusible link O for ABS relay unit. For fusible link layout, refer to POWER SUPPLY ROUTING in EL section.

NG → Ⓑ (Skip page.)

OK ↓

Check 10A fuse 26. For fuse layout, refer to POWER SUPPLY ROUTING in EL section.

NG → Ⓒ (See next page.)

OK ↓

1. Disconnect connectors from control unit and ABS actuator. Check terminals for damage or loose connection. Then reconnect connectors.
2. Carry out self-diagnosis again.
Does warning lamp activate again?

No → Inspection end

Yes ↓

A

1. Disconnect ABS relay unit 2-pin connector F38.
2. Check voltage between connector (body side) terminal ⑩ and ground.
Battery voltage should exist.

NG → Check the following.
- Harness connector F38
- Harness for open or short between ABS relay unit and fuse

If NG, repair harness or connectors.

OK ↓

B

CIRCUIT CHECK

1. Disconnect ABS relay unit 8-pin connector F40 and control unit connector T32, T33.
2. Check continuity between control unit connector terminals and ABS relay unit 8-pin connector F40 (body side) terminals.

Control unit	ABS relay unit
108	⑧
⑲	④
⑩	⑤

Continuity should exist.

NG → Check the following.
- Harness connector T32, T33, F40
- Harness for open or short between solenoid valve relay unit terminal (body side) and control unit

If NG, repair harness or connectors.

OK ↓

Ⓐ

(Go to next page.)

Diagnostic Procedure 4 (Motor relay or motor) (Cont'd)

C ABS motor relay and solenoid valve relay (Built into ABS relay unit)

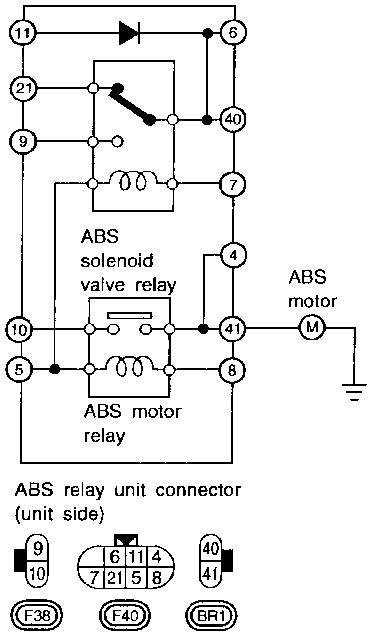

SBR583D

D

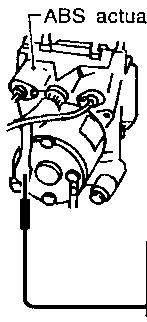

ABS actuator 2-pin connector (BR1) (ABS actuator side)

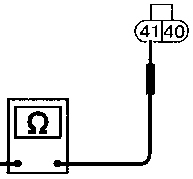

SBR338DA

E

ABS actuator 2-pin connector (BR1) (ABS actuator side)

ABS relay unit 2-pin connector (F38) (body side)

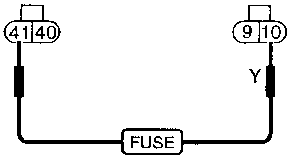

SBR586D

Ⓐ

C

MOTOR RELAY CHECK → NG → Replace ABS relay unit.

Relay type		ABS motor relay
Condition		Continuity existence between terminals ④ or ㊶ and ⑩
Battery voltage not applied between each terminal	⑤ and ⑧	No
Battery voltage applied between each terminal	⑤ and ⑧	Yes
Check resistance between each terminal	⑤ and ⑧	Approx. 100Ω

OK ↓

ACTUATOR MOTOR GROUND CHECK → NG → Repair harness and terminals.

Refer to ACTUATOR MOTOR GROUND in Ground Circuit Check, BR-50.

OK ↓

D

Check continuity between ABS actuator 2-pin connector (BR1) (ABS actuator side) terminal ㊶ and actuator motor positive terminal.
Continuity should exist.

→ NG → Repair harness and connectors.

OK ↓

E

MOTOR CHECK → NG → Replace ABS actuator.

1. Disconnect ABS relay unit 2-pin connector (F38) and ABS actuator 2-pin connector (BR1).
2. Connect suitable wire between ABS relay unit 2-pin connector (body side) terminal ⑩ and ABS actuator 2-pin connector (ABS actuator side) terminal ㊶.
   Motor should operate.
   Do not connect wire for more than 5 seconds.

OK ↓

Go to Diagnostic Procedure 5, BR-60.

Ⓒ

Replace fuse.
Does the fuse blow out when ignition switch is turned "ON"?

→ Yes → Check the following.
- Harness connector (F40)
- Harness for open or short between ABS relay unit connector and fuse

If NG, repair harness or connectors.

No ↓

Inspection end

Diagnostic Procedure 4 (Motor relay or motor) (Cont'd)

F

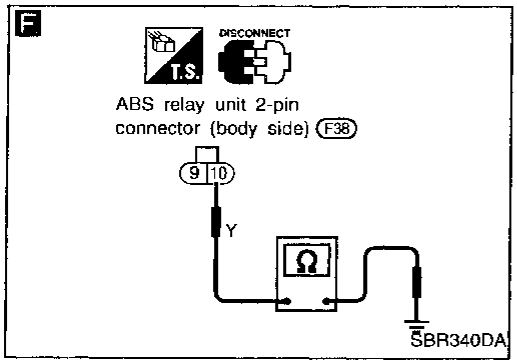

G

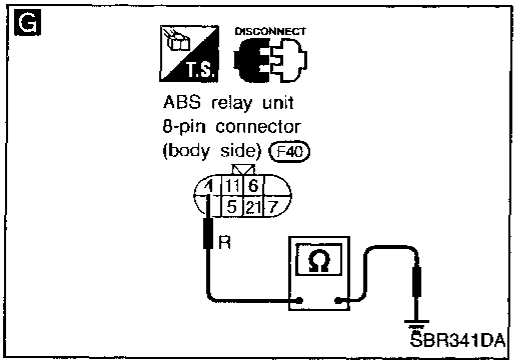

H

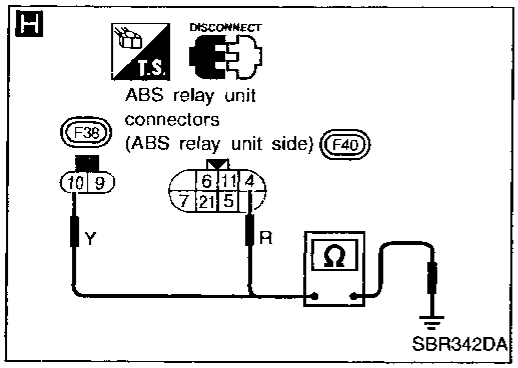

I

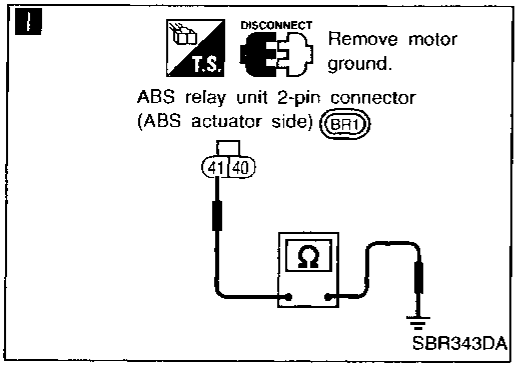

Ⓑ

Replace fusible link.
Does the fusible link blow out when ignition switch is turned "ON"?

No → Inspection end

Yes ↓

F

MOTOR POWER SUPPLY CIRCUIT

1. Disconnect battery cable and ABS relay unit 2-pin connector F38.
2. Check continuity between ABS relay unit 2-pin connector F38 (body side) terminal ⑩ and ground.
Continuity should not exist.

NG → Check the following.
- Harness connector F38
- Harness for open or short between ABS relay unit and fuse

If NG, repair harness or connectors.

OK ↓

G

1. Disconnect ABS relay unit 8-pin connector and control unit connector.
2. Check continuity between ABS relay unit 8-pin connector F40 (body side) terminal ④ and ground.
Continuity should not exist.

NG → Check the following.
- Harness connector T32, T33, F40
- Harness for open or short between solenoid valve relay unit terminal (body side) and control unit

If NG, repair harness or connectors.

OK ↓

H

Check continuity between ABS relay unit 8-pin connector F40 (ABS relay unit side) terminal ④ and ground, 2-pin connector F38 (ABS relay unit side) terminal ⑩ and ground.
Continuity should not exist.

NG → Replace ABS relay unit.

OK ↓

I

1. Remove motor ground.
2. Check continuity between ABS relay unit 2-pin connector BR1 (ABS actuator side) terminal ㊶ and ground.
Continuity should not exist.

NG → Replace ABS actuator.

OK ↓

MOTOR CHECK

Go to **D** in Diagnostic Procedure 4 (preceding page).

OK ↓

Check control unit pin terminals for damage or the connection of control unit harness connector.
Reconnect control unit harness connector.
Then retest.

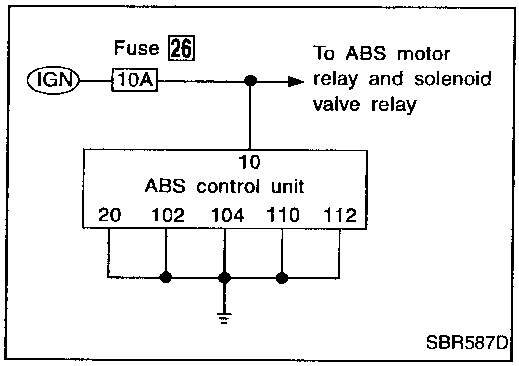

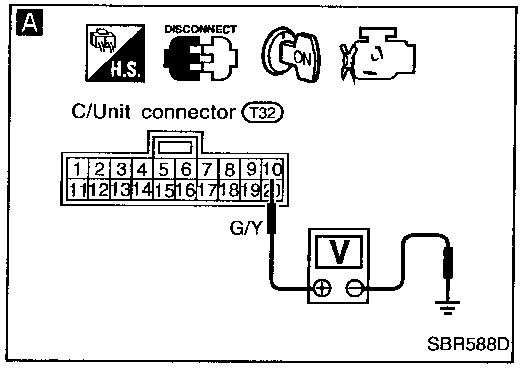

Diagnostic Procedure 5 (Low voltage)

Malfunction code No. 57

1. Disconnect control unit connectors. Check terminals for damage or loose connections. Then reconnect connectors.
2. Carry out self-diagnosis again. **Does warning lamp activate again?**

No → Inspection end

Yes ↓

A

CONTROL UNIT POWER SUPPLY CHECK

1. Disconnect control unit connector.
2. Check voltage between control unit connector terminal ⑩ and ground. **Battery voltage should exist when ignition switch is turned ON.**

NG → Ⓐ (See below.)

OK ↓

CONTROL UNIT GROUND CHECK

Refer to CONTROL UNIT GROUND in Ground Circuit Check, BR-50.

NG → Repair harness and connectors.

OK ↓

Check control unit pin terminals for damage or the connection of control unit harness connector.
Reconnect control unit harness connector.
Then retest.

Ⓐ ↓

Check 10A fuse 26. Refer to POWER SUPPLY ROUTING in EL section.

NG → Replace fuse.

OK ↓

Check continuity between battery and control unit connector terminal ⑩.

NG → Check the following.
- Harness connector T32
- Harness for open or short between control unit and fuse

If NG, repair harness or connectors.

OK ↓

Check battery. Refer to BATTERY in EL section.

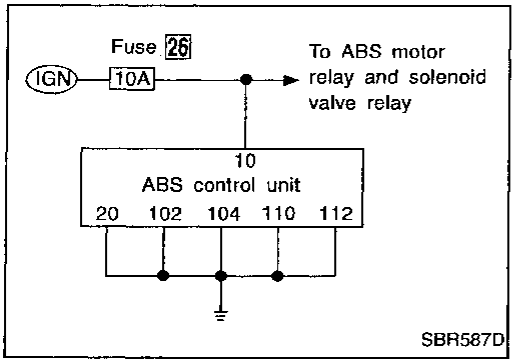

Diagnostic Procedure 6 (Control unit)

Malfunction code No. 71

1. Disconnect control unit connectors. Check terminals for damage or loose connections. Then reconnect connectors.
2. Carry out self-diagnosis again. **Does warning lamp activate again?**

No → Inspection end

Yes ↓

CONTROL UNIT POWER SUPPLY CHECK

Check voltage. Refer to **A** in Diagnostic Procedure 5, BR-60.

↓

Does warning lamp indicate code No. 71 again?

Yes → Replace control unit.

No ↓

Inspect the system according to the code No.

Diagnostic Procedure 7 (ABS works frequently.)

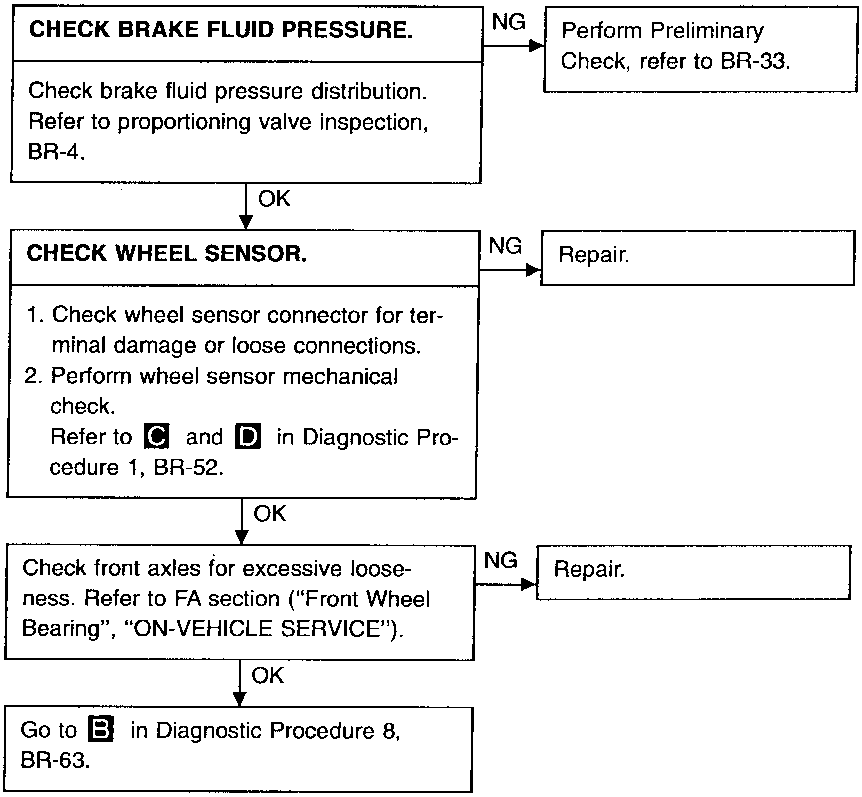

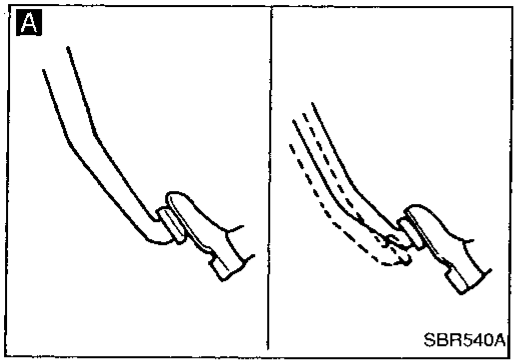

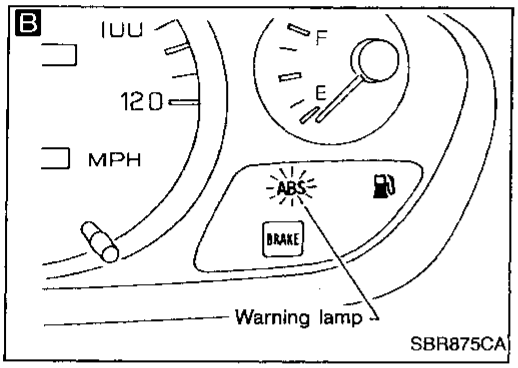

Diagnostic Procedure 8 (Unexpected pedal action)

A

Check brake pedal stroke. Is stroke excessively large?
- Yes → Perform Preliminary Check, refer to BR-33.
- No ↓

Disconnect ABS relay unit 8-pin connector and check whether brake is effective.
- No → Perform Preliminary Check, refer to BR-33.
- Yes ↓

B

Ensure warning lamp remains off while driving.
- NG → Carry out self-diagnosis. Refer to BR-41, 45.
- OK ↓

CHECK WHEEL SENSOR.
- NG → Repair.

1. Check wheel sensor connector for terminal damage or loose connection.
2. Perform wheel sensor mechanical check.
   Refer to **C** and **D** in Diagnostic Procedure 1, BR-52.

OK ↓

Check control unit pin terminals for damage or the connection of control unit harness connector.
Reconnect control unit harness connector.
Then retest.

Diagnostic Procedure 9 (Long stopping distance)

Disconnect ABS relay unit 8-pin connector and check whether stopping distance is still long.
- No → Go to **B** in Diagnostic Procedure 8, BR-63.
- Yes ↓

Perform Preliminary Check and air bleeding.

Note: Stopping distance may be larger than vehicles without ABS when road condition is slippery.

Diagnostic Procedure 10 (ABS does not work.)

Does the ABS warning lamp activate?

- Yes → Carry out self-diagnosis. Refer to BR-41, 45.
- No → Go to **B** in Diagnostic Procedure 8, BR-63.

Note: ABS does not work when vehicle speed is under 10 km/h (6 MPH).

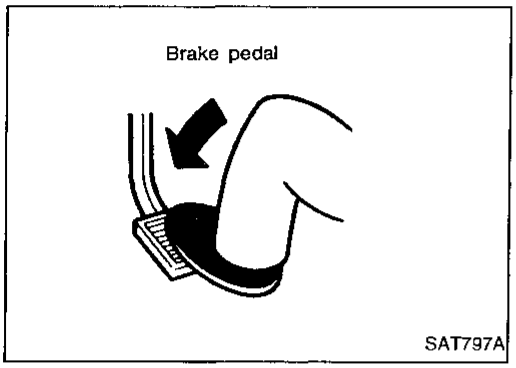

Diagnostic Procedure 11 (Pedal vibration and noise)

1. Apply brake.
2. Start engine.
3. Does the symptom appear only when engine is started?

- Yes → Carry out self-diagnosis. Refer to BR-41, 45.
- No → Does the symptom appear when electrical equipment switches (such as headlamp) are operated?
  - No → Go to **B** in Diagnostic Procedure 8, BR-63.
  - Yes → Check wheel sensor shield ground. For location of shield ground, refer to wiring diagram and "HARNESS LAYOUT" in EL section.
    - NG → Repair.
    - OK → Check control unit pin terminals for damage or the connection of control unit harness connector. Reconnect control unit harness connector. Then retest.

Note: ABS may operate and cause vibration under any of the following conditions.

- **Applying brake gradually when shifting or operating clutch.**
- **Low friction (slippery) road.**
- **High speed cornering.**
- **Driving over bumps and pot holes.**
- **Engine speed is over 5,000 rpm with vehicle stopped.**

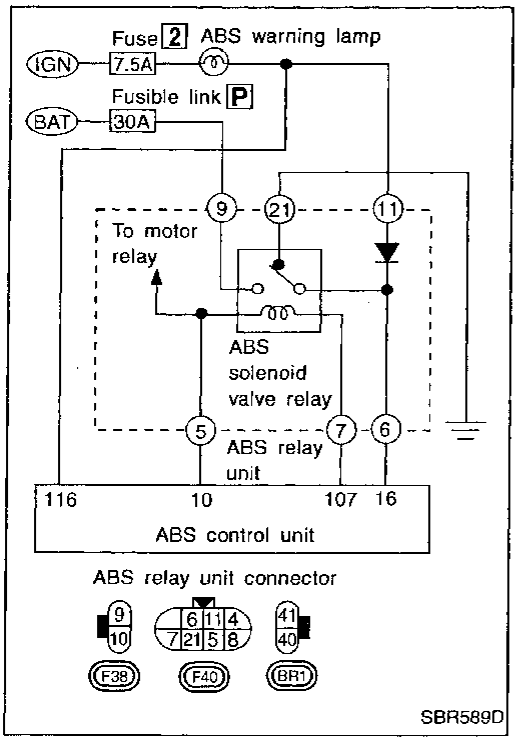

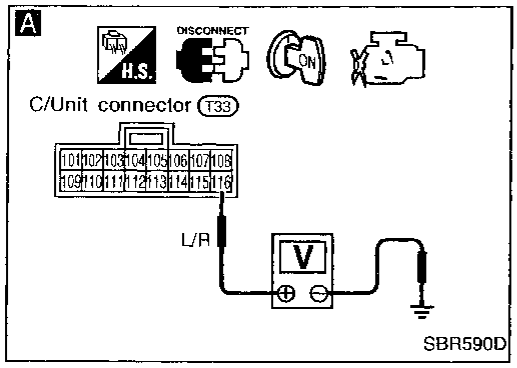

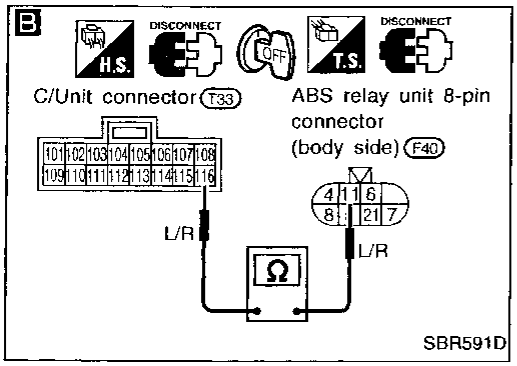

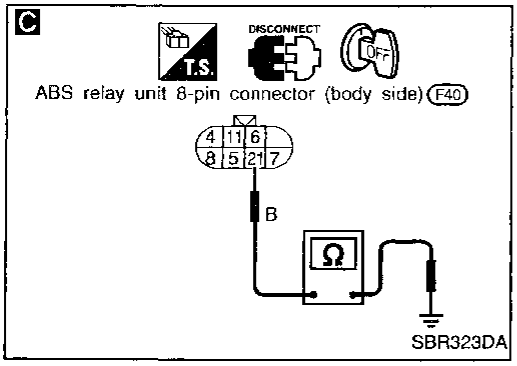

Diagnostic Procedure 12 (Warning lamp does not come on when ignition switch is turned on.)

WARNING LAMP CIRCUIT CHECK

Check 7.5A fuse 2 for warning lamp. For fuse layout, refer to POWER SUPPLY ROUTING in EL section.

NG → Replace fuse.

OK ↓

A

1. Install 7.5A fuse.
2. Disconnect connectors from control unit and actuator.
3. Check voltage between control unit connector terminal 116 and ground after turning ignition switch "ON".
   Battery voltage should exist after turning ignition switch "ON".

NG → Check warning lamp bulb.

NG → Replace bulb.

OK → Repair harness and connectors between battery and control unit connector terminal 116 (including combination meter).

OK ↓

B

1. Turn ignition switch "OFF". Disconnect ABS relay unit 8-pin connector.
2. Check continuity between control unit connector terminal 116 and ABS relay unit 8-pin connector (body side) terminal 11.
   Continuity should exist.

NG → Repair harness and connectors between warning lamp (combination meter) and ABS relay unit 8-pin connector (body side) terminal 11.

OK ↓

C

1. Disconnect ABS relay unit 8-pin connector.
2. Check continuity between ABS relay unit harness 8-pin connector (body side) terminal 21 and body ground.
   Continuity should exist.

NG → Repair harness and connectors.

OK ↓

A
(Go to next page.)

Diagnostic Procedure 12 (Warning lamp does not come on when ignition switch is turned on.) (Cont'd)

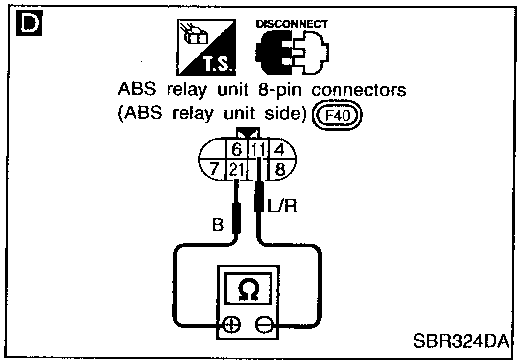

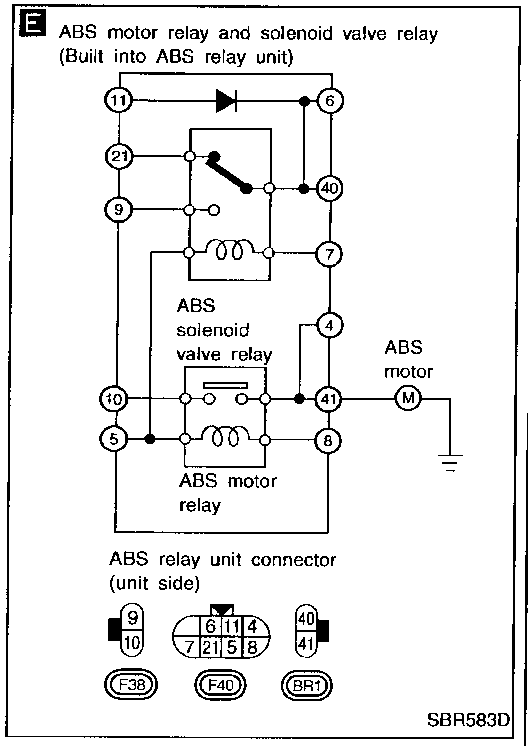

Ⓐ

D

1. Disconnect ABS relay unit 8-pin connector.
2. Check continuity between ABS relay unit 8-pin connector (ABS relay unit side) terminals ⑪⊖ and ㉑⊕.
   Continuity should exist.

Note: Pay attention to tester polarity*.

NG → Replace ABS relay unit.

OK ↓

CONTROL UNIT POWER SUPPLY CIRCUIT.

NG → Repair harness and connectors.

Go to **A** in Diagnostic Procedure 13, BR-67.

OK ↓

E

CHECK SOLENOID VALVE RELAY.

NG → Replace ABS relay unit.

Relay type		Solenoid valve relay
Condition		Continuity existence between terminals ④ or ⑥ and ㉑
Battery voltage not applied between each terminal	⑤ and ⑦	Yes
Battery voltage applied between each terminal	⑤ and ⑦	No
Check resistance between each terminal	⑤ and ⑦	Approx. 100Ω

OK ↓

Go to Diagnostic Procedure 5, BR-60.

***: Specifications may vary depending on the type of tester. Before performing this inspection, refer to the instruction manual of the tester.**

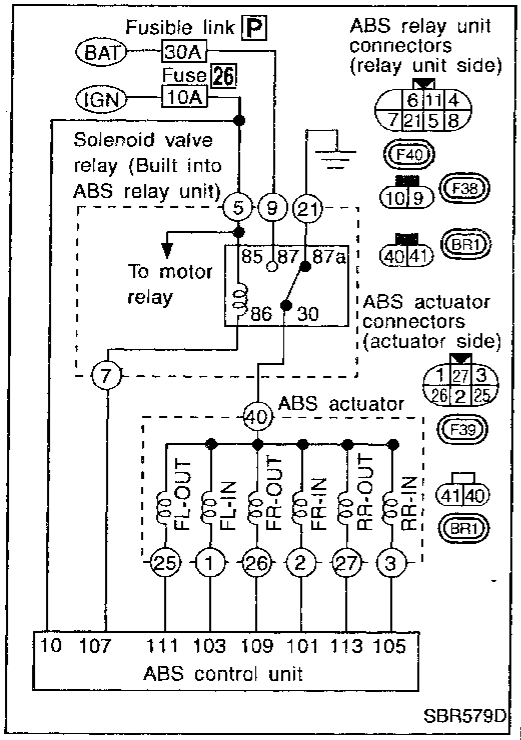

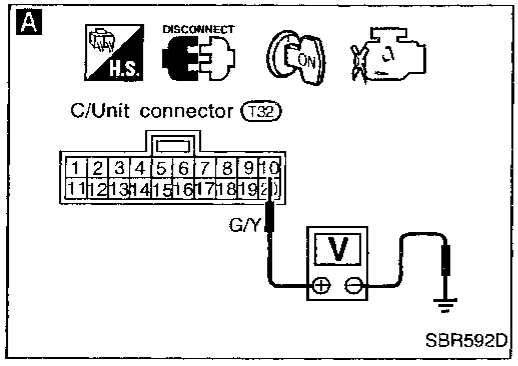

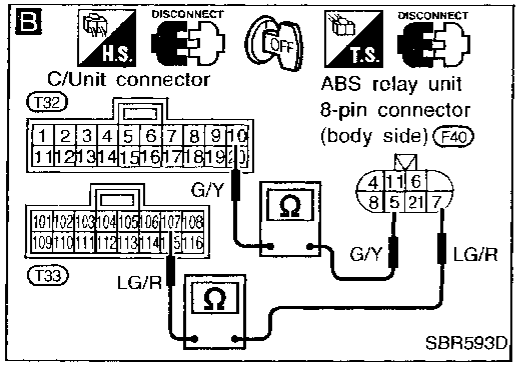

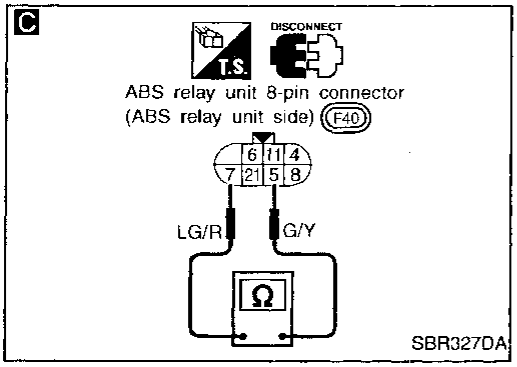

Diagnostic Procedure 13 (Warning lamp stays on when ignition switch is turned on.)

A

CONTROL UNIT POWER SUPPLY CIRCUIT

Check 10A fuse 26 for control unit.
For fuse layout, refer to POWER SUPPLY ROUTING in EL section.

NG → Ⓑ (Skip page.)

OK ↓

1. Disconnect connector from control unit.
2. Check voltage between control unit connector terminal ⑩ and ground after turning ignition switch "ON".
Battery voltage should exist.

NG → Check the following.
- Harness connector T32
- Harness for open or short between control unit and fuse

If NG, repair harness or connectors.

OK ↓

B

SOLENOID VALVE RELAY COIL POWER SUPPLY CIRCUIT

1. Turn ignition switch "OFF". Disconnect ABS relay unit 8-pin connector.
2. Check continuity between control unit connector terminals and ABS relay unit 8-pin connector (body side) terminals.

Control unit	ABS relay unit
⑩	⑤
107	⑦

Continuity should exist.

NG → Check the following.
- Harness connector T32, T33, F40
- Harness for open or short between solenoid valve relay unit terminal (body side) and control unit

If NG, repair harness or connectors.

OK ↓

C

CIRCUIT CHECK

1. Disconnect ABS relay unit 8-pin connector.
2. Check continuity between ABS relay unit 8-pin connector (ABS relay unit side) terminals ⑤ and ⑦.
Continuity should exist.

NG → Replace ABS relay unit.

OK ↓

SOLENOID VALVE RELAY CHECK

Go to **E** in Diagnostic Procedure 12, BR-66.

NG → Replace ABS relay unit.

OK ↓

Ⓐ
(Go to next page.)

Diagnostic Procedure 13 (Warning lamp stays on when ignition switch is turned on.) (Cont'd)

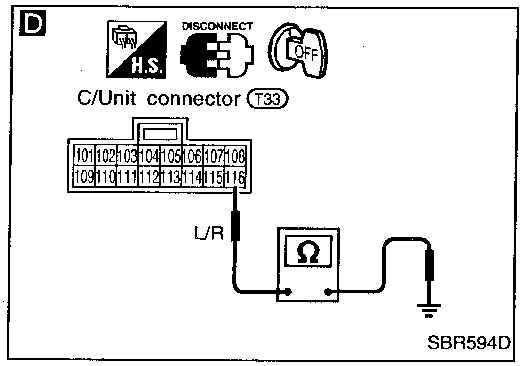

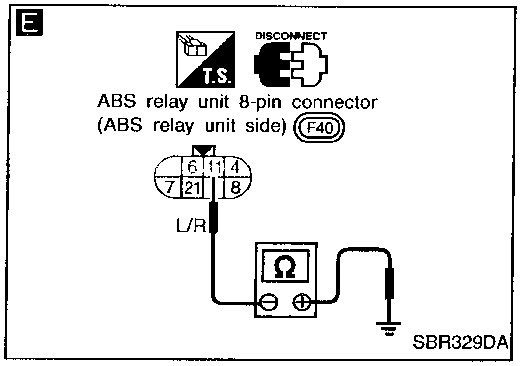

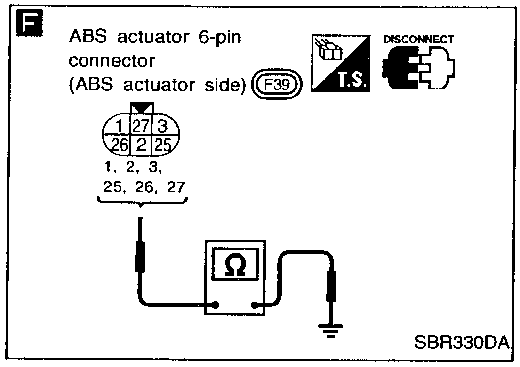

Ⓐ

D

GROUND-SHORT CHECK FOR WARNING LAMP CIRCUIT.

1. Turn ignition switch "OFF".
2. Disconnect connectors from control unit and ABS relay unit 8-pin connector.
3. Check continuity between control unit connector terminal 116 and body ground.
   Continuity should not exist.

NG → Check the following.
- Harness connector T33
- Harness for open or short between control unit and fuse

If NG, repair harness or connectors.

OK ↓

E

1. Disconnect actuator ground terminal and ABS relay unit 8-pin connector.
2. Check continuity between ABS relay unit 8-pin connector (ABS relay unit side) terminal 11 and body ground.
   Continuity should not exist.

Note: Pay attention to tester polarity*.

NG → Replace ABS relay unit.

OK ↓

F

SOLENOID VALVE CIRCUIT

1. Disconnect ABS actuator 6-pin connector.
2. Check continuity between each ABS actuator 6-pin connector (ABS actuator side) terminals and body ground.
   Continuity should not exist.

NG → Replace ABS actuator.

OK ↓

Check control unit pin terminals for damage or the connection of control unit harness connector.
Reconnect control unit harness connector.
Then retest.

***: Specifications may vary depending on the type of tester.**
Before performing this inspection, refer to the instruction manual of the tester.

Diagnostic Procedure 13 (Warning lamp stays on when ignition switch is turned on.) (Cont'd)

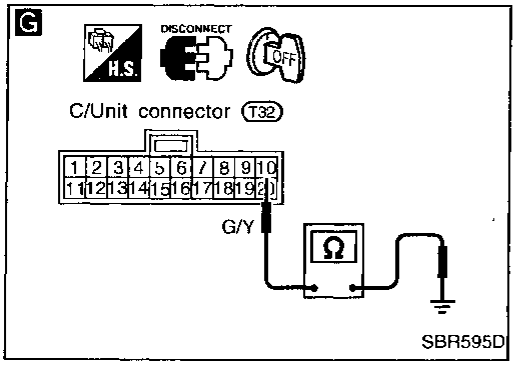

Ⓑ

Replace 10A fuse.
Does the fuse blow out when ignition switch is turned "ON"?

No → Inspection end

Yes ↓

G

CONTROL UNIT POWER SUPPLY CIRCUIT

1. Disconnect control unit connector.
2. Check continuity between control unit connector terminal ⑩ and body ground.
   Continuity should not exist.

NG → Check the following.
- Harness connector T32
- Harness for open or short between control unit and fuse

If NG, repair harness or connectors.

OK ↓

Check control unit pin terminals for damage or the connection of control unit harness connector.
Reconnect control unit harness connector.
Then retest.

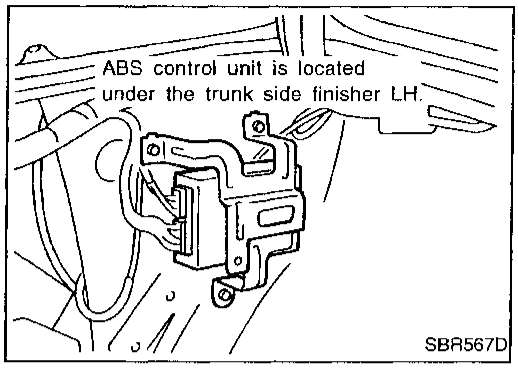

Electrical Component Inspection

INSPECTION OF ABS CONTROL UNIT

- Check that voltage between ABS control unit terminals is within the following reference value.

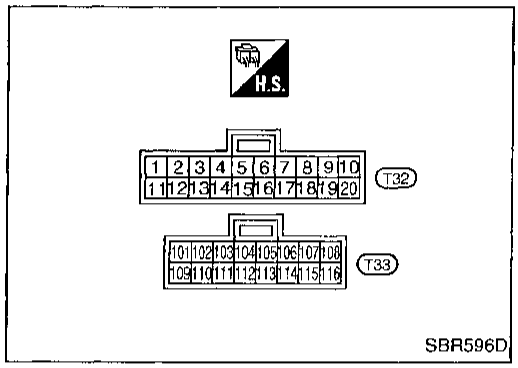

- Pin connector terminal layout.

ABS control unit inspection table

TERMINAL NO. +	TERMINAL NO. −	ITEM	CONDITION	DATA (Reference value)
10	Ground	Power source	Ignition switch "ON"	Battery voltage
6		Stop lamp switch signal	Brake pedal depressed	Approx. 12V
			Brake pedal released	Less than 2V
108		Motor relay	ABS actuator motor operating (Perform "ACTIVE TEST" mode with CONSULT.) Engine running	Less than 2V
			ABS actuator motor not operating	Approx. 12V
107		Solenoid valve relay	Solenoid valve relay operating (Engine is running.)	Less than 2V
			Solenoid valve relay not operating (Ignition switch "ON")	Approx. 12V
16		Actuator monitor	Solenoid valve relay operating (Engine is running.)	Approx. 12V
			Solenoid valve relay not operating (Ignition switch "ON")	Approx. 0V
101		Front solenoid valve RH IN	ABS actuator operating (Perform "ACTIVE TEST" mode with CONSULT.) Engine running	Approx. 0V
105		Rear solenoid valve IN		
103		Front solenoid valve LH IN	ABS actuator not operating (Engine is running with vehicle stopped.)	Approx. 12V
18		Motor monitor	ABS actuator motor operating (Perform "ACTIVE TEST" mode with CONSULT.) Engine running	Approx. 12V
			ABS actuator motor not operating	Approx. 0V
116		ABS warning lamp	ABS warning lamp "ON"	Approx. 0V
			ABS warning lamp "OFF"	Approx. 12V

Electrical Component Inspection (Cont'd)

TERMINAL NO. +	TERMINAL NO. −	ITEM	CONDITION	DATA (Reference value)
2	12	Front wheel sensor RH	Wheel is rotating [Drive vehicle at 30 km/h (20 MPH).]	Approx. 0.1 - 0.2V Approx. 200 Hz*1
4	14	Rear wheel sensor		Approx. 0.1 - 0.2V Approx. 400 Hz*1
3	13	Front wheel sensor LH		Approx. 0.1 - 0.2V Approx. 200 Hz*1
17	Ground	Engine speed signal*2	Engine running at idle speed	Approx. 1.0V
			Engine running at 2,000 rpm	Approx. 2.4V
109		Front solenoid valve RH OUT	ABS actuator operating (Perform "ACTIVE TEST" mode with CONSULT.) Engine running	Approx. 0V
113		Rear solenoid valve OUT		
111		Front solenoid valve LH OUT	ABS actuator not operating (Engine is running with vehicle stopped.)	Approx. 12V

*1: Use oscilloscope checking, when pulse occurs.
*2: Refer to "ECM terminals and reference value" in EC section.

General Specifications

Front brake	
Brake model	CL25VA disc brake
Cylinder bore diameter mm (in)	57.2 (2.252)
Pad Length x width x thickness mm (in)	125.6 x 46.0 x 11 (4.94 x 1.811 x 0.43)
Rotor outer diameter x thickness mm (in)	257 x 22 (10.12 x 0.87)
Rear brake	
Brake model	CL11H disc brake
Cylinder bore diameter mm (in)	38.18 (1.5031)
Pad Length x width x thickness mm (in)	75.0 x 40.0 x 9.5 (2.953 x 1.575 x 0.374)
Rotor outer diameter x thickness mm (in)	258 x 9 (10.16 x 0.35)

Model	Without ABS		With ABS
	M/T	A/T	
Master cylinder			
Cylinder bore diameter mm (in)	22.22 (7/8)	23.81 (15/16)	
Control valve			
Valve model	Proportioning valve (built into master cylinder)		
Split point kPa (kg/cm², psi) x reducing ratio	2,942 (30, 427) x 0.4		
Brake booster			
Booster model	M23	M195T	
Diaphragm diameter mm (in)	230 (9.06)	Primary: 205 (8.07) Secondary: 180 (7.09)	
Recommended brake fluid	DOT 3		

Inspection and Adjustment

DISC BRAKE

Brake model	CL25VA	CL11H
Pad wear limit mm (in)		
Minimum thickness	2.0 (0.079)	
Rotor repair limit mm (in)		
Minimum thickness	20.0 (0.787)	8 (0.31)

PARKING BRAKE

Type	Center lever
Number of notches [under force of 196 N (20 kg, 44 lb)]	7 - 9
Number of notches when warning lamp switch comes on	1

BRAKE PEDAL

Model	Without ABS		With ABS	
	M/T	A/T	M/T	A/T
Free height "H"* mm (in)	181 - 191 (7.13 - 7.52)	191 - 201 (7.52 - 7.91)	181 - 191 (7.13 - 7.52)	191 - 201 (7.52 - 7.91)
Depressed height "D" mm (in) [under force of 490 N (50 kg, 110 lb) with engine running]	100 (3.94)	115 (4.53)	110 (4.33)	115 (4.53)
Pedal free play "A" mm (in)	1 - 3 (0.04 - 0.12)			
Clearance "C" between pedal stopper and threaded end of stop lamp switch or ASCD switch mm (in)	0.3 - 1.0 (0.012 - 0.039)			

*: Measured from surface of dash lower panel to surface of pedal pad